STATE OF VERMONT
AGENCY OF TRANSPORTATION

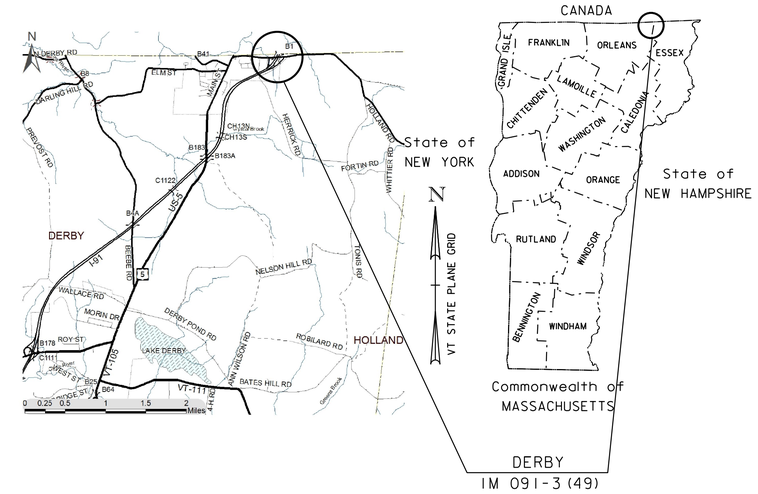

PROPOSED IMPROVEMENT
BRIDGE PROJECT

TOWN OF DERBY

COUNTY OF ORLEANS

ROUTE NO : TH 1 (US 5 CONNECTOR OVER I-91) BRIDGE NO : 1

PROJECT LOCATION : THE BRIDGE IS LOCATED ON US 5 CONNECTOR, 500' EAST OF THE I-91S ON RAMP AND 200' SOUTH OF THE CANADA BORDER

PROJECT DESCRIPTION : REHABILITATION OF EXISTING BRIDGE, TO INCLUDE NEW SUPERSTRUCTURE, NEW BEARINGS, REPLACEMENT OF PIER CAPS, ELIMINATION OF THE WESTERN PIER AND RELATED ROADWAY WORK.

LENGTH OF STRUCTURE :	318.28 FEET
LENGTH OF ROADWAY :	71.72 FEET
LENGTH OF PROJECT :	390.00 FEET

N

VT STATE PLANE GRID

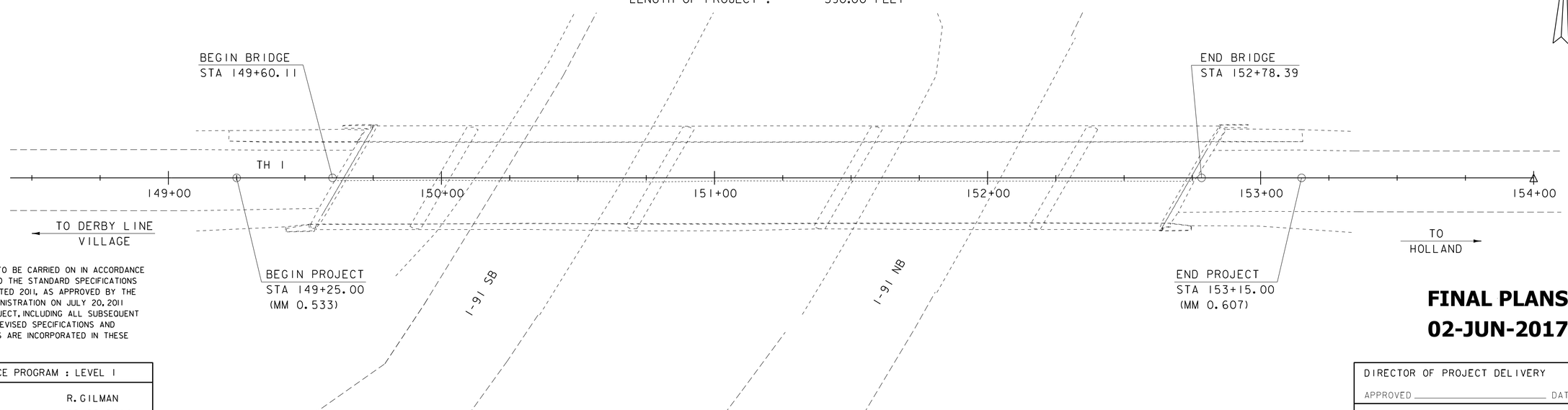

CONSTRUCTION IS TO BE CARRIED ON IN ACCORDANCE WITH THESE PLANS AND THE STANDARD SPECIFICATIONS FOR CONSTRUCTION DATED 2011, AS APPROVED BY THE FEDERAL HIGHWAY ADMINISTRATION ON JULY 20, 2011 FOR USE ON THIS PROJECT, INCLUDING ALL SUBSEQUENT REVISIONS AND SUCH REVISED SPECIFICATIONS AND SPECIAL PROVISIONS AS ARE INCORPORATED IN THESE PLANS.

FINAL PLANS
02-JUN-2017

QUALITY ASSURANCE PROGRAM : LEVEL 1	
SURVEYED BY :	R. GILMAN
SURVEYED DATE :	02-06-2014
DATUM	
VERTICAL	NAVD88
HORIZONTAL	NAD82 (2011)

SCALE 1" = 20'-0"
20 0 20

DIRECTOR OF PROJECT DELIVERY
APPROVED _____ DATE _____

PROJECT MANAGER : C. CARLSON, PE

PROJECT NAME : DERBY
PROJECT NUMBER : IM 091-3(49)

SHEET 1 OF 73 SHEETS

STATE OF VERMONT
AGENCY OF TRANSPORTATION

PRELIMINARY INFORMATION SHEET (BRIDGE)

Version
LRFD

INDEX OF SHEETS

PLAN SHEETS

1	TITLE
2	PRELIMINARY INFORMATION SHEET
3	TYPICAL SECTIONS
4	GENERAL NOTES
5 - 7	QUANTITY SHEETS
8	BRIDGE QUANTITY SHEET
9	CONVENTIONAL SYMBOLOGY LEGEND
10	TIE SHEET
11	LAYOUT
12	TH 1 PROFILE AND MATERIAL TRANSITION DETAIL
13 - 14	TEMPORARY TRAFFIC PLAN
15	BRIDGE PHASING TYPICALS
16	PLAN AND ELEVATION
17	BRIDGE DECK DETAILS
18	FRAMING PLAN AND GIRDER ELEVATION
19	SPLICE DETAILS
20	STRUCTURAL STEEL DETAILS
21	EXPANSION JOINT NO.1 PLAN AND SECTION
22	EXPANSION JOINT NO.2 PLAN AND SECTION
23	EXPANSION JOINT DETAILS
24	CURB PLATES PLAN AND SECTION
25	CURB PLATE AND FIELD SPLICE DETAILS
26	FABRIC TROUGH DETAILS
27	DOWNSPOUT DETAILS
28	ABUTMENT EXPANSION BEARING DETAILS
29	PIER EXPANSION BEARING DETAILS
30	PIER FIXED BEARING DETAILS
31	APPROACH SLAB DETAILS
32	ABUTMENT NO.1 PHASE CONSTRUCTION DETAILS
33	ABUTMENT NO.2 PHASE CONSTRUCTION DETAILS
34	PIER PHASE CONSTRUCTION DETAILS
35	SECTIONS AND WINGWALL CORNER DETAILS
36	ABUTMENT DOWEL LAYOUT
37	ABUTMENT NO. 1 DETAILS
38	ABUTMENT NO. 2 DETAILS
39	WINGWALL DETAILS
40	PIER DETAILS
41	PIER NO.1 REINFORCING DETAILS
42	PIERS NO.2 AND 3 REINFORCING DETAILS
43 - 44	REINFORCING STEEL SCHEDULES
45 - 48	BRIDGE RAILING DETAILS
49	THRIE-BEAM TO BOX BEAM APPROACH RAILING DETAILS
50 - 54	TH 1 CROSS SECTIONS
55 - 62	I-91 CROSS SECTIONS
63	EPSC NARRATIVE
64	EPSC LAYOUT
65 - 66	EPSC DETAILS
67 - 73	REFERENCE SHEETS

STANDARDS LIST

C-10	CURBING	02-11-2008
E-171A	TRAFFIC CONTROL SIGNALS GENERAL NOTES & DETAILS	08-09-1995
E-171B	TRAFFIC CONTROL SIGNALS MISC. DETAILS	08-09-1995
E-171C	TRAFFIC CONTROL SIGNALS CANTILEVER MOUNTING DETAILS	08-09-1995
E-172	VEHICLE DETECTOR LOOP DETAILS	08-09-1995
E-175	POWER DROP STANCHIONS	06-08-2009
E-193	PAVEMENT MARKING DETAILS	08-18-1995
F-2	CHAIN LINK FENCE, TYPE I DETAILS	06-01-1994
F-4	CHAIN LINK FENCE, TYPE II DETAILS	06-01-1994
G-1	STEEL BEAM GUARDRAIL DETAILS (POST, DELINEATOR, TYPICALS)	03-10-2017
S-363	THRIE BEAM TO STANDARD STEEL BEAM TRANSITION SECTION	02-02-2017
S-391	SNOW BARRIER	01-16-2014
T-1	TRAFFIC CONTROL GENERAL NOTES	04-25-2016
T-2	TRAFFIC SIGN GENERAL NOTES	04-25-2016
T-10	CONVENTIONAL ROADS CONSTRUCTION APPROACH SIGNING	08-06-2012
T-11	CONSTRUCTION APPROACH SIGNING DIVIDED HIGHWAY ONE LANE CLOSED	08-06-2012
T-12	TRAFFIC CONTROL DIVIDED HIGHWAY ONE LANE CLOSED	08-06-2012
T-13	TRAFFIC CONTROL DIVIDED HIGHWAY ONE LANE CLOSED	08-06-2012
T-28	CONSTRUCTION SIGN DETAILS	08-06-2012
T-30	CONSTRUCTION SIGN DETAILS	08-06-2012
T-31	CONSTRUCTION SIGN DETAILS	08-06-2012
T-35	CONSTRUCTION ZONE LONGITUDINAL DROP-OFFS	08-06-2012
T-36	CONSTRUCTION ZONE LONGITUDINAL DROP-OFFS FOR PAVING	08-06-2012

STRUCTURES & HSD DETAIL SHEETS

SD-501.00	CONCRETE DETAILS AND NOTES	02-09-2012
SD-502.00	CONCRETE DETAILS AND NOTES	10-10-2012
SD-516.10	BRIDGE JOINT ASHPALTIC PLUG	08-29-2011
SD-601.00	STRUCTURAL STEEL DETAILS AND NOTES	06-04-2010
SD-602.00	STRUCTURAL STEEL PLATE GIRDER DETAILS AND NOTES	05-02-2011
HSD-400.01	SAFETY EDGE DETAILS	03-29-2016
HSD-621.06	MISCELLANEOUS GUARDRAIL DETAILS	02-27-2017

DRY CROSSING

TRAFFIC MAINTENANCE NOTES

1. MAINTAIN ONE-WAY TRAFFIC ON THE EXISTING STRUCTURE.
2. INSTALL AND MAINTAIN TRAFFIC SIGNALS.
3. SIDEWALKS ARE NOT NECESSARY

DESIGN VALUES

1.	DESIGN LIVE LOAD		HL-93
2.	FUTURE PAVEMENT	d_p:	- - -
3.	ABUTMENT BEARING TO BEARING LENGTH (FOUR SPANS) (117.00 - 69.00 - 79.00 - 47.50) FT	L:	312.50 FT
4.	MIN. MID-SPAN POS. CAMBER @ RELEASE (PRESTRESSED UNITS)	Δ:	- - -
5.	PRESTRESSING STRAND	f_y:	- - -
6.	PRESTRESSED CONCRETE STRENGTH	f'_c:	- - -
7.	PRESTRESSED CONCRETE RELEASE STRENGTH	f'_{ci}:	- - -
8.	CONCRETE, HIGH PERFORMANCE CLASS AA	f'_c:	4.0 KSI
9.	CONCRETE, HIGH PERFORMANCE CLASS A	f'_c:	4.0 KSI
10.	CONCRETE, HIGH PERFORMANCE CLASS B	f'_c:	3.5 KSI
11.	CONCRETE, CLASS C	f'_c:	3.0 KSI
12.	REINFORCING STEEL	f_y:	60 KSI
13.	STRUCTURAL STEEL AASHTO M270	f_y:	50 KSI
14.	NOMINAL BEARING RESISTANCE OF SOIL	q_n:	4.0 KSF
15.	SOIL BEARING RESISTANCE FACTOR (REFER TO AASHTO LRFD)	ϕ:	- - -
16.	NOMINAL BEARING RESISTANCE OF ROCK	q_n:	10.0 KSF
17.	ROCK BEARING RESISTANCE FACTOR (REFER TO AASHTO LRFD)	ϕ:	- - -
18.	PILE RESISTANCE FACTOR	ϕ:	- - -
19.	LATERAL PILE DEFLECTION	Δ:	- - -
20.	BASIC WIND SPEED	V_{3s}:	- - -
21.	MINIMUM GROUND SNOW LOAD	p_g:	- - -
22.	SEISMIC DATA PGA: 0	S_s:	- - -
		S_1:	- - -
23.			
24.			- - -
25.			- - -
26.			- - -

LRFR LOAD RATING FACTORS

LOADING LEVELS	TRUCK						
	H-20	HL-93	3S2	6 AXLE	3A STR.	4A STR.	5A SEM
TONNAGE	20	36	36	66	30	34.5	38
INVENTORY	3.26	1.06					
POSTING							
OPERATING	4.23	1.38	2.96	1.70	2.94	2.60	2.65
COMMENTS:							

AS BUILT "REBAR" DETAIL

LEVEL I	LEVEL II	LEVEL III
TYPE:	TYPE:	TYPE:
GRADE:	GRADE:	GRADE:

TRAFFIC DATA

YEAR	ADT	DHV	% D	% T	ADTT
2016	1400	160	52	8.3	160
2036	1500	170	52	12.1	240

20 year ESAL for flexible pavement from 2016 to 2036 : 1403000
40 year ESAL for flexible pavement from 2016 to 2056 : 3371000
Design Speed : 30 mph

PROJECT NAME: **DERBY**
PROJECT NUMBER: **IM 091-3(49)**

FILE NAME: **s12a274forms.dgn**
PROJECT LEADER: **C. CARLSON**
DESIGNED BY: **D. PETERSON**
PRELIMINARY INFORMATION SHEET

PLOT DATE: 3/2/2017
DRAWN BY: **G. ROY**
CHECKED BY: **J. LACY**
SHEET 2 OF 73

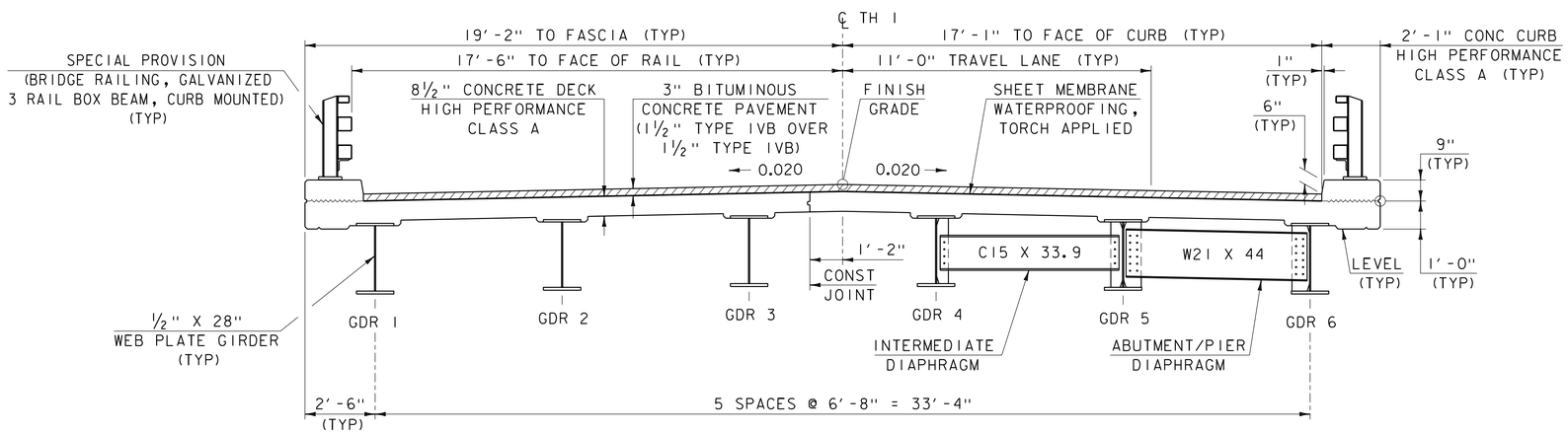

BRIDGE TYPICAL SECTION

SCALE: ⅜" = 1'-0"

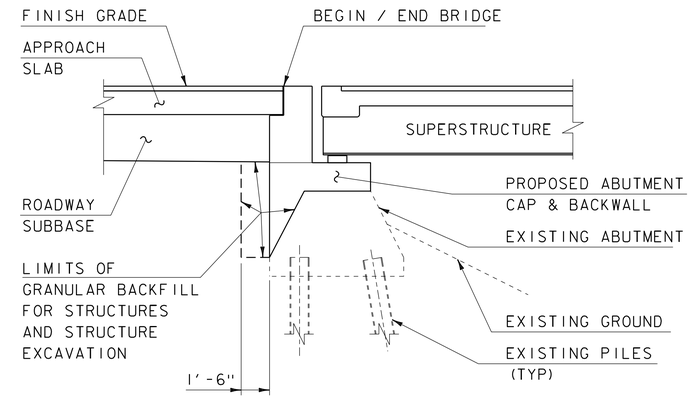

ABUTMENT TYPICAL EARTHWORK SECTION

SCALE: ¼" = 1'-0"

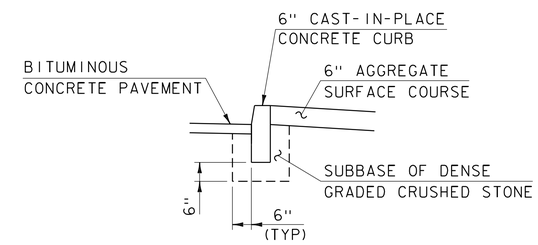

CURB TYPICAL IN COLD-PLANED SECTION

SCALE: ½" = 1'-0"

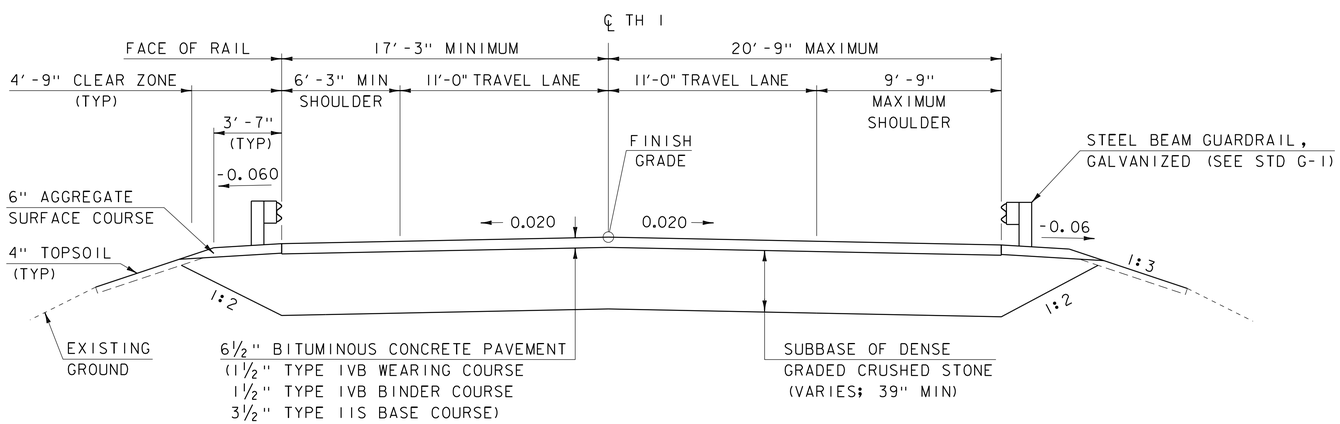

ROADWAY TYPICAL SECTION

SCALE: ¼" = 1'-0"

MATERIAL TOLERANCES

(IF USED ON PROJECT)

SURFACE	
- PAVEMENT (TOTAL THICKNESS)	+/- ¼"
- AGGREGATE SURFACE COURSE	+/- ½"
SUBBASE	+/- 1"
SAND BORROW	+/- 1"

NOTES:

1. BITUMINOUS CONCRETE PAVEMENT, TYPE IIS WILL BE PAID FOR UNDER ITEM 900.680 "SPECIAL PROVISION (BITUMINOUS CONCRETE PAVEMENT, SMALL QUANTITY)".
2. BITUMINOUS CONCRETE PAVEMENT, TYPE IVB WILL BE PAID FOR UNDER ITEM 900.680 "SPECIAL PROVISION (BITUMINOUS CONCRETE PAVEMENT, TYPE IVB)".
3. TACK COAT: EMULSIFIED ASPHALT IS TO BE APPLIED AT A RATE OF 0.025 GAL/SY BETWEEN SUCCESSIVE COURSES OF PAVEMENT AND 0.080 GAL/SY ON COLD PLANED SURFACES AS DIRECTED BY THE ENGINEER.

PROJECT NAME: DERBY	
PROJECT NUMBER: IM 091-3(49)	
FILE NAME: s12a274typ.dgn	PLOT DATE: 02-JUN-2017
PROJECT LEADER: C. CARLSON	DRAWN BY: M. LONGSTREET
DESIGNED BY: D. PETERSON	CHECKED BY: J. LACY
TYPICAL SECTIONS	SHEET 3 OF 73

GENERAL

1. ALL MATERIALS AND CONSTRUCTION SHALL CONFORM TO THE VERMONT AGENCY OF TRANSPORTATION 2011 STANDARD SPECIFICATIONS FOR CONSTRUCTION, THE 2014 AASHTO LRFD BRIDGE DESIGN SPECIFICATIONS, AND THEIR LATEST REVISIONS.

2. ALL DIMENSIONS ARE HORIZONTAL OR VERTICAL, AND ARE GIVEN AT 68 DEGREES FAHRENHEIT, UNLESS NOTED OTHERWISE.

3. REMOVAL OF THE EXISTING STRUCTURE WILL BE PAID FOR UNDER ITEM 529.20 "PARTIAL REMOVAL OF STRUCTURE". THIS WORK SHALL INCLUDE :

   A. REMOVAL OF THE EXISTING SUPERSTRUCTURE INCLUDING THE PAVEMENT, CURB, RAIL, DECK AND BEAMS.
   B. REMOVAL OF EXISTING PIER #1 TO THE LIMITS SHOWN IN THE PLANS.
   C. PARTIAL REMOVAL OF THE ABUTMENTS AND REMAINING PIERS TO THE LIMITS SHOWN IN THE PLANS.

4. THE CONTRACTOR SHALL SUBMIT CONSTRUCTION DRAWINGS IN ACCORDANCE WITH SECTION 105 FOR THE METHODS AND SEQUENCE OF THE DEMOLITION OF THE EXISTING BRIDGE AND THE ERECTION OF THE NEW STRUCTURAL STEEL. AT A MINIMUM EACH OF THESE PLANS SHALL:

   A. IDENTIFY LOCATIONS OF CRANES AND OTHER LARGE EQUIPMENT,
   B. IDENTIFY LOCATIONS OF TRUCK LOADING AND ACCESS POINTS,
   C. DESCRIBE HOW THE WORK WILL BE PHASED BY DAY/WORK SHIFT,
   D. IDENTIFY DAYTIME AND NIGHTTIME WORK ACTIVITIES.

   PAYMENT FOR PREPARATION OF THE DEMOLITION PLAN SHALL BE INCIDENTAL TO ITEM 529.20 "PARTIAL REMOVAL OF STRUCTURE". PAYMENT FOR PREPARATION OF THE ERECTION PLAN SHALL BE INCIDENTAL TO ITEM 506.55 "STRUCTURAL STEEL, PLATE GIRDER".

5. A PLAN DETAILING THE METHODS AND MATERIALS REQUIRED TO PROTECT THE TRAVELLING PUBLIC BELOW THE BRIDGE SHALL BE SUBMITTED TO THE ENGINEER FOR APPROVAL. PAYMENT FOR THIS WORK WILL BE MADE UNDER ITEM 900.645 "SPECIAL PROVISION (PUBLIC PROTECTION FOR BRIDGE PROJECTS)".

EARTHWORK

6. ANY TEMPORARY MEAN OF SUPPORTING EXCAVATION NECESSARY TO MAINTAIN TRAFFIC SHALL BE INCIDENTAL TO ITEM 641.10 "TRAFFIC CONTROL". ASSOCIATED CONSTRUCTION DRAWINGS SHALL BE SUBMITTED IN ACCORDANCE WITH SECTION 105.

TRAFFIC CONTROL

7. TRAFFIC CONTROL FOR TH #1 (US 5 CONNECTOR) SHALL BE AS SHOWN IN THE PLANS, STANDARD DRAWINGS AND SECTION 6 OF THE MUTCD. PAYMENT SHALL BE MADE UNDER ITEM 641.10 "TRAFFIC CONTROL". ENERGY ABSORPTION ATTENUATORS, TEMPORARY TRAFFIC BARRIER, REMOVE AND RESET TEMPORARY TRAFFIC BARRIERS, PORTABLE CHANGEABLE MESSAGE SIGNS, TEMPORARY LINE STRIPING AND STOP BARS, REMOVAL OF EXISTING PAVEMENT MARKINGS, AND TEMPORARY TRAFFIC SIGNAL SYSTEM SHALL BE PAID FOR SEPARATELY UNDER THEIR APPROPRIATE CONTRACT ITEM.

8. THE CONTRACTOR SHALL BE RESPONSIBLE FOR THE DESIGN AND IMPLEMENTATION OF A SITE SPECIFIC TRAFFIC CONTROL PLAN TO MANAGE THE TRAFFIC ON INTERSTATE 91. THE PLAN SHALL CLEARLY DETAIL HOW TRAFFIC WILL BE MAINTAINED. THE PLAN SHALL SPECIFY ALL CONSTRUCTION ACTIVITIES REQUIRING LANE OR SHOULDER REDUCTIONS, ROLLING ROAD BLOCKS OR SHORT DURATION CLOSURES AND RELATE THOSE ACTIVITIES TO THE CONSTRUCTION SCHEDULE, AND SHOW APPROPRIATE TEMPORARY TRAFFIC CONTROL. ALL COSTS WILL BE INCLUDED IN ITEM 900.645 "SPECIAL PROVISION (TRAFFIC CONTROL, ALL-INCLUSIVE) (I-91)". PORTABLE CHANGEABLE MESSAGE SIGNS SHALL BE PAID FOR SEPARATELY UNDER ITEM 641.15.

9. ALL SIGNING SHALL BE IN ACCORDANCE WITH THE LATEST EDITION OF THE MUTCD. FOR ADDITIONAL SIGNING INSTRUCTIONS SEE THE T SERIES OF THE STANDARD DRAWINGS. WHERE CONFLICTS EXIST, THE MUTCD SHALL GOVERN.

10. FULL ACCESS TO ALL SIDE ROADS AND DRIVES WITHIN THE PROJECT LIMITS SHALL BE MAINTAINED AT ALL TIMES. THIS WORK SHALL BE CONSIDERED INCIDENTAL TO ITEM 641.10 "TRAFFIC CONTROL".

TEMPORARY TRAFFIC SIGNALS

11. THE DESIGN OF THE SIGNAL SUPPORTS AND ANY REQUIRED GUYING SHALL BE THE RESPONSIBILITY OF THE CONTRACTOR.

12. SIGNAL TIMING/TIMING ADJUSTMENTS REQUESTED BY THE ENGINEER SHALL BE ACCOMPLISHED WITHIN A 48 HOUR PERIOD AND PAYMENT WILL BE INCIDENTAL TO ITEM 678.40 "TEMPORARY TRAFFIC SIGNAL SYSTEM". THE ENGINEER SHALL MAKE SEVERAL TRAIL RUNS TO DETERMINE THE PROPER ALL-RED CLEARANCE INTERVAL.

13. SIGNAL FACES SHALL BE LED AND CONSIST OF 12 INCH LENSES (RED, YELLOW AND GREEN).

14. THE BOTTOM OF THE HOUSING OF A SIGNAL FACE SUSPENDED OVER A ROADWAY SHALL NOT BE LESS THAN 16.5 FEET NOR MORE THAN 19.0 FEET ABOVE THE PAVEMENT GRADE AT THE CENTER OF THE ROADWAY. THE BOTTOM OF A SIGNAL FACE NOT MOUNTED OVER A ROADWAY SHALL NOT BE LESS THAN 8.0 FEET NOR MORE THAN 15.0 FEET ABOVE THE GROUND. CAUTION SHOULD BE USED TO ENSURE COMPLIANCE WITH THE HEIGHT REQUIREMENT IN THE EVENT THE NEW APPROACH GRADE DIFFER SIGNIFICANTLY FROM THE FOLD ROADWAY GRADE.

15. SIGNAL FACES FOR ANY ONE APPROACH SHALL NOT BE LESS THAN 8 FEET APART MEASURED HORIZONTALLY BETWEEN CENTER FACES.

16. SIGNAL HEADS MAY BE HUNG ON A SPAN WIRE OF ON A CANTILEVER MAST ARM. AT LEAST ONE SIGNAL HEAD SHALL BE UNMISTAKABLY IN LINE WITH THE CENTER OF APPROACHING TRAFFIC AT ALL TIMES. THE SECOND SIGNAL HEAD MAY BE POST MOUNTED, LOCATED AT A DISTANCE OF NO GREATER THAN 14.5 FEET FROM THE CENTER OF THE APPROACH LANE WHEN THE STOP BAR IS 40 FEET FROM THE SIGNAL HEAD. CONSULT THE CURRENT EDITION OF THE MUTCD FOR ADDITIONAL INFORMATION CONCERNING SIGNAL PLACEMENT.

17. THE TEMPORARY TRAFFIC SIGNAL SYSTEM SHALL CONSIST OF POLES, SIGNS AND POSTS, WARNING SIGNS, LUMINAIRES, TEMPORARY DETECTORS, AND SIGNAL EQUIPMENT TO PROVIDE AN ADEQUATE DESIGN. IT ALSO INCLUDES PERMITS AND COSTS ASSOCIATED WITH PROVIDING ELECTRICAL POWER. ALL WORK WILL BE PAID UNDER ITEM 678.40 "TEMPORARY TRAFFIC SIGNAL SYSTEM".

18. INSTALL WIRING BETWEEN SIGNAL POLES TO PROVIDE FOR A SAFE INSTALLATION. ATTACHMENT TO UTILITY POLES TO BE COORDINATED BY THE CONTRACTOR WITH THE UTILITY COMPANY. PAYMENT WILL BE CONSIDERED INCIDENTAL TO ITEM 678.40 "TEMPORARY TRAFFIC SIGNAL SYSTEM".

19. PLACE TEMPORARY POLES BEHIND GUARDRAIL WHERE POSSIBLE, OR OUTSIDE CLEAR ZONE.

20. POLES SUPPORTING SPAN WIRES AND/OR MAST ARMS SHALL BE ADEQUATELY BRACED OR GUYED AND SHALL BE PLACED SO AS NOT TO CREATE A HAZARD TO THE TRAVELLING PUBLIC.

21. LUMINAIRES SHALL BE INSTALLED AT EACH OF THE APPROACHES TO ADEQUATELY LIGHT THE STOP BAR AREAS. HIGH PRESSURE SODIUM OR LED LUMINAIRES ARE ACCEPTABLE FORMS OF LAMPS. THE MOUNTING HEIGHT FOR LUMINAIRES SHALL BE DETERMINED BY THE CONTRACTOR. ILLUMINANCE SHALL BE MEASURED AT NIGHTTIME AFTER INSTALLATION AT EACH STOP BAR. ILLUMINANCE SHALL BE NO LESS THAN 1.0 FOOT-CANDLES AND NOT TO EXCEED 2.0 FOOT-CANDLES. PAYMENT WILL BE CONSIDERED INCIDENTAL TO ITEM 678.40 "TEMPORARY TRAFFIC SIGNAL SYSTEM".

22. ALL TEMPORARY SIGNAL EQUIPMENT, SIGNS, ETC. SHALL BELONG TO THE CONTRACTOR AT THE END OF THE PROJECT AND THE CONTRACTOR SHALL BE RESPONSIBLE FOR THEIR REMOVAL INCLUDING UTILITY POLES, WIRES, ETC. PAYMENT WILL BE CONSIDERED INCIDENTAL TO ITEM 678.40 "TEMPORARY TRAFFIC SIGNAL SYSTEM".

23. STOP BARS SHALL BE LOCATED A MINIMUM OF 40' AND A MAXIMUM OF 120' FROM THE NEAREST SIGNAL HEAD.

24. ALL ELECTRICAL WORK SHALL MEET THE REQUIREMENTS OF THE NATIONAL ELECTRICAL CODE AND STATE INSPECTOR.

25. THE CONTRACTOR SHALL BE RESPONSIBLE FOR DETERMINING SIGNAL PHASING. THE CONTRACTOR SHALL SUBMIT A PHASING DIAGRAM TO THE ENGINEER FOR APPROVAL. THE CONTRACTOR SHALL MAKE THE SIGNALS OPERATIONAL ONLY AFTER RECEIVING APPROVAL OF THE PHASING DIAGRAM BY THE ENGINEER. DEVELOPMENT OF THE PHASING DIAGRAM WILL BE CONSIDERED INCIDENTAL TO ITEM 678.40 "TEMPORARY TRAFFIC SIGNAL SYSTEM".

CONCRETE

26. ITEM 514.10 "WATER REPELLENT, SILANE" SHALL BE APPLIED TO ALL EXPOSED CONCRETE ON THE BRIDGE SUPERSTRUCTURE AND SUBSTRUCTURE, INCLUDING THE EXISTING SUBSTRUCTURES TO REMAIN IN PLACE, EXCEPT FOR THE BOTTOM OF THE DECK BETWEEN THE DRIP NOTCHES.

27. ITEM 501.33 "CONCRETE, HIGH PERFORMANCE CLASS A" SHALL BE USED FOR THE FOLLOWING:

   A. DECK
   B. CURBS, INCLUDING THE CURB ON TOP OF THE WINGWALLS, AND
   C. THE PORTION OF THE ABUTMENT BACKWALLS CAST AROUND THE EXPANSION JOINTS, AS SHOWN IN THE PLANS.

28. ITEM 501.34 "CONCRETE, HIGH PERFORMANCE CLASS B" SHALL BE USED FOR THE FOLLOWING:

   A. APPROACH SLABS
   B. PIER CAPS
   C. REMAINING SECTIONS OF THE ABUTMENTS BELOW THE EXPANSION JOINT POUR
   D. WINGWALLS BELOW THE CURB

29. JOINTS AND SCORE MARKS IN CONCRETE SHALL BE CONSTRUCTED AS INDICATED ON THE PLANS OR AS DIRECTED BY THE ENGINEER.

30. CONSTRUCTION JOINT SHEAR KEYS SHALL BE MONOLITHIC AND CONTINUOUS FOR THE LENGTH OF THE CONSTRUCTION JOINT.

31. THE DECK FOR EACH PHASE IS TO BE POURED IN ONE CONTINUOUS POUR WITH A MAXIMUM DURATION OF EIGHT HOURS. IF CIRCUMSTANCES BEYOND THE CONTRACTOR'S CONTROL PREVENT THIS FROM BEING ACCOMPLISHED, A TRANSVERSE CONSTRUCTION JOINT SHALL BE USED BETWEEN ADJACENT POURS. A MINIMUM 96 HOUR DELAY BETWEEN ADJACENT POURS SHALL BE OBSERVED.

REINFORCING STEEL

32. ALL REINFORCING STEEL IN THE DECK, CURBS, ABUTMENTS, AND WINGWALLS SHALL MEET THE REQUIREMENTS FOR LEVEL III CORROSION RESISTANCE IN ACCORDANCE WITH SECTION 507 AND ARE MARKED WITH A ".3" IN THEIR SUFFIX. ALL REINFORCING STEEL IN THE APPROACH SLABS AND PIER CAPS SHALL MEET THE REQUIREMENTS FOR LEVEL I EPOXY COATED CORROSION RESISTANCE IN ACCORDANCE WITH SECTION 507 AND MARKED WITH AN "E" IN THEIR PREFIX.
33. MECHANICAL CONNECTORS SHALL BE PROVIDED IN ACCORDANCE WITH SUBSECTION 713.02.

SUBSTRUCTURE

34. A THOROUGH INSPECTION OF THE EXISTING SUBSTRUCTURES TO BE RETAINED SHALL BE MADE BY THE CONTRACTOR AND ENGINEER. AREAS OF CONCRETE FOUND TO BE SPALLED, DELAMINATED OR OTHERWISE UNSOUND SHALL BE REPAIRED. THE AREAS THAT NEED TO BE REPAIRED SHALL BE PAID FOR UNDER ITEM 580.13 "REPAIR OF CONCRETE SUBSTRUCTURE, CLASS I" AND ITEM 580.14 "REPAIR OF CONCRETE SUBSTRUCTURE, CLASS II".

STRUCTURAL STEEL

35. SOME OF THE EXISTING STRUCTURAL STEEL IS PAINTED WITH A MATERIAL THAT MAY CONTAIN LEAD. THE CONTRACTOR SHALL FOLLOW ALL APPLICABLE REGULATIONS WHEN HANDLING AND WORKING WITH THIS STEEL. THE REMOVED STRUCTURAL STEEL IS THE PROPERTY OF THE CONTRACTOR. THE CONTRACTOR SHALL INDEMNIFY AND HOLD THE STATE, ITS OFFICERS, AND EMPLOYEES HARMLESS CONCERNING THE CONTRACTOR'S USE OR DISPOSITION OF THE REMOVED EXISTING STRUCTURAL STEEL.

36. FLEMING BRACKETS OR SIMILAR FALSEWORK SHALL BE SPACED AS REQUIRED BY DESIGN, BUT SHALL BE LIMITED TO A MAXIMUM SPACING OF 4 FEET. THE DESIGN OF FALSEWORK SHALL BE THE RESPONSIBILITY OF THE CONTRACTOR.

37. ANY BOLT HOLES IN THE WEBS OF FASCIA GIRDERS NOT OTHERWISE FILLED SHALL BE FILLED WITH BUTTON HEAD OR HEX HEAD BOLTS. THE BOLTS SHALL BE TIGHTENED IN ACCORDANCE WITH SUBSECTION 506.19 OF THE STANDARD SPECIFICATIONS.

38. STRUCTURAL STEEL MEMBERS DESIGNATED "CVN" IN THE PLANS SHALL BE CHARPY V-NOTCH TESTED IN ACCORDANCE WITH SUBSECTION 714.01 OF THE STANDARD SPECIFICATIONS.

39. AFTER SUPERSTRUCTURE STEEL HAS BEEN ERECTED, ELEVATIONS ALONG THE TOP OF THE GIRDERS SHALL BE TAKEN AS DIRECTED BY THE ENGINEER FOR USE IN DETERMINING FINISHED GRADES.

40. GIRDER WEBS AND DIAPHRAGMS SHALL BE PLUMB IN FINAL POSITION.

PIER

41. TEMPORARY SHORING OF THE SUPERSTRUCTURE WILL BE REQUIRED AT ALL PIERS DURING CONSTRUCTION. PAYMENT WILL BE MADE UNDER ITEM 502.10 "SHORING SUPERSTRUCTURE" FOR EACH LOCATION.

STATE OF VERMONT
AGENCY OF TRANSPORTATION

QUANTITY SHEET 1

SUMMARY OF ESTIMATED QUANTITIES				TOTALS		DESCRIPTIONS			
ROADWAY	EROSION CONTROL	BRIDGE	FULL C.E. ITEMS	GRAND TOTAL	FINAL	UNIT	ITEMS	ITEM NUMBER	ROUND
1				1		LS	CLEARING AND GRUBBING, INCLUDING INDIVIDUAL TREES AND STUMPS	201.10	-
520				520		CY	COMMON EXCAVATION	203.15	8.44
1				1		CY	TRENCH EXCAVATION OF EARTH, EXPLORATORY (N.A.B.I.)	204.22	-
		90		90		CY	STRUCTURE EXCAVATION	204.25	10.05
		60		60		CY	GRANULAR BACKFILL FOR STRUCTURES	204.30	7.07
430				430		SY	COLD PLANING, BITUMINOUS PAVEMENT	210.10	4.73
250				250		CY	SUBBASE OF DENSE GRADED CRUSHED STONE	301.35	4.97
30				30		CY	AGGREGATE SURFACE COURSE	401.10	5.28
4		3		7		CWT	EMULSIFIED ASPHALT	404.65	0.61
1				1		LU	PRICE ADJUSTMENT, ASPHALT CEMENT (N.A.B.I.)	406.50	-
		386		386		CY	CONCRETE, HIGH PERFORMANCE CLASS A	501.33	2.16
		214		214		CY	CONCRETE, HIGH PERFORMANCE CLASS B	501.34	1.5
		1		1		LS	SHORING SUPERSTRUCTURE (STATION 150+01.00)	502.10	-
		1		1		LS	SHORING SUPERSTRUCTURE (STATION 150+80.00)	502.10	-
		1		1		LS	SHORING SUPERSTRUCTURE (STATION 151+49.00)	502.10	-
		1		1		LS	SHORING SUPERSTRUCTURE (STATION 152+28.00)	502.10	-
		426870		426870		LB	STRUCTURAL STEEL, PLATE GIRDER	506.55	4.66
		26000		26000		LB	REINFORCING STEEL, LEVEL I	507.11	21.49
		105090		105090		LB	REINFORCING STEEL, LEVEL III	507.13	11.53
		695		695		LF	DRILLING AND GROUTING DOWELS	507.16	2
		85		85		EACH	MECHANICAL BAR CONNECTOR (#5 EPOXY COATED)	507.19	-
		24		24		EACH	MECHANICAL BAR CONNECTOR (#7 EPOXY COATED)	507.19	-
		48		48		EACH	MECHANICAL BAR CONNECTOR (#9 EPOXY COATED)	507.19	-
		1		1		LS	SHEAR CONNECTORS (5520 - 7/8" X 7")	508.15	-
		34		34		GAL	WATER REPELLENT, SILANE	514.10	1.26
		90		90		LF	BRIDGE EXPANSION JOINT, VERMONT	516.11	1.48
		1190		1190		SY	SHEET MEMBRANE WATERPROOFING, TORCH APPLIED	519.20	6.95
		80		80		LF	JOINT SEALER, HOT POURED	524.11	1.1
		1		1		LS	MAINTENANCE OF STRUCTURES AND APPROACHES	527.10	-
		1		1		EACH	PARTIAL REMOVAL OF STRUCTURE	529.20	-
		30		30		EACH	BEARING DEVICE ASSEMBLY, STEEL REINFORCED ELASTOMERIC PAD	531.17	-
		6		6		SY	REPAIR OF CONCRETE SUBSTRUCTURE SURFACE, CLASS I	580.13	-
		6		6		SY	REPAIR OF CONCRETE SUBSTRUCTURE SURFACE, CLASS II	580.14	-
5				5		MGAL	DUST CONTROL WITH WATER	609.10	-
116				116		LF	CAST-IN-PLACE CONCRETE CURB, TYPE B	616.28	-
80				80		LF	REMOVING AND RESETTING FENCE	620.50	7.31
		294		294		LF	SNOW BARRIER	620.75	0.3
402				402		LF	STEEL BEAM GUARDRAIL, GALVANIZED	621.20	0.7
3				3		EACH	MANUFACTURED TERMINAL SECTION, FLARED	621.50	-
5				5		EACH	ENERGY ABSORPTION ATTENUATOR	621.56	-

DETAILED SUMMARY OF QUANTITIES

QUANTITIES	UNIT	ITEMS
		EARTHWORKS SUMMARY
		FILL AVAILABLE
312	CY	COMMON EXCAVATION (520 x 0.6)
27	CY	STRUCTURE EXCAVATION (90 x 0.3)
1	CY	ROUNDING
340	**CY**	**TOTAL FILL AVAILABLE**
		FILL REQUIRED
0	CY	FACTORED FILL (0 x 1.15)
0	CY	ROUNDING
0	**CY**	**TOTAL FILL REQUIRED**
340	**CY**	**TOTAL WASTE**

PROJECT NAME: DERBY
PROJECT NUMBER: IM 091-3(49)

FILE NAME: s12a274forms.dgn
PROJECT LEADER: C. CARLSON
DESIGNED BY: D. PETERSON
QUANTITY SHEET (1)

PLOT DATE: 02-JUN-2017
DRAWN BY: G. ROY
CHECKED BY: D. PETERSON
SHEET 5 OF 73

STATE OF VERMONT
AGENCY OF TRANSPORTATION

QUANTITY SHEET 2

SUMMARY OF ESTIMATED QUANTITIES					TOTALS		DESCRIPTIONS			
ROADWAY	EROSION CONTROL	BRIDGE	FULL C.E. ITEMS		GRAND TOTAL	FINAL	UNIT	ITEMS	ITEM NUMBER	ROUND
740					740		LF	REMOVAL AND DISPOSAL OF GUARDRAIL	621.80	1.3
500					500		LF	TEMPORARY TRAFFIC BARRIER	621.90	-
480					480		LF	REMOVE AND RESET TEMPORARY TRAFFIC BARRIER	621.95	-
500					500		HR	UNIFORMED TRAFFIC OFFICERS	630.10	-
2000					2000		HR	FLAGGERS	630.15	-
			1		1		LS	FIELD OFFICE, ENGINEERS	631.10	-
			1		1		LS	TESTING EQUIPMENT, CONCRETE	631.16	-
			1		1		LS	TESTING EQUIPMENT, BITUMINOUS	631.17	-
			1500		1500		DL	FIELD OFFICE TELEPHONE (N.A.B.I.)	631.26	-
1					1		LS	MOBILIZATION/DEMOBILIZATION	635.11	-
1					1		LS	TRAFFIC CONTROL	641.10	-
2					2		EACH	PORTABLE CHANGEABLE MESSAGE SIGN	641.15	-
1330					1330		LF	4 INCH WHITE LINE	646.20	-
1370					1370		LF	4 INCH YELLOW LINE	646.21	1
2670					2670		LF	TEMPORARY 4 INCH WHITE LINE	646.600	6.44
22					22		LF	TEMPORARY 24 INCH STOP BAR	646.680	0.66
960					960		SF	REMOVAL OF EXISTING PAVEMENT MARKINGS	646.85	5.65
	150				150		SY	GEOTEXTILE FOR SILT FENCE	649.51	9.35
	30				30		LB	SEED	651.15	0.85
	30				30		LB	SEED, WINTER RYE	651.17	0.85
	60				60		LB	FERTILIZER	651.18	1.69
	0.3				0.3		TON	AGRICULTURAL LIMESTONE	651.20	0.07
	0.3				0.3		TON	HAY MULCH	651.25	0.07
	70				70		CY	TOPSOIL	651.35	7.29
	1				1		LS	EPSC PLAN	652.10	-
	50				50		HR	MONITORING EPSC PLAN	652.20	-
	1				1		LU	MAINTENANCE OF EPSC PLAN (N.A.B.I.)	652.30	-
	420				420		SY	TEMPORARY EROSION MATTING	653.20	9.36
	30				30		CY	VEHICLE TRACKING PAD	653.35	0.37
	670				670		LF	PROJECT DEMARCATION FENCE	653.55	8.2
1					1		EACH	TEMPORARY TRAFFIC SIGNAL SYSTEM	678.40	-
12					12		EACH	SPECIAL PROVISION (CPM SCHEDULE)	900.620	-
4					4		EACH	SPECIAL PROVISION (GUARDRAIL APPROACH SECTION, THRIE-BEAM TO GALVANIZED 3 RAIL BOX BEAM)	900.620	-
		669			669		LF	SPECIAL PROVISION (BRIDGE RAILING, GALVANIZED 3 RAIL BOX BEAM, CURB MOUNTED)	900.640	0.8
1					1		LS	SPECIAL PROVISION (PUBLIC PROTECTION FOR BRIDGE PROJECTS)	900.645	-
1					1		LS	SPECIAL PROVISION (TRAFFIC CONTROL, ALL-INCLUSIVE)(I-91)	900.645	-
1					1		LU	SPECIAL PROVISION (MAT DENSITY PAY ADJUSTMENT, SMALL QUANTITY)(N.A.B.I.)	900.650	-
1					1		LU	SPECIAL PROVISION (MAT DENSITY PAY ADJUSTMENT, TYPE IVB)(N.A.B.I.)	900.650	-
1					1		LU	SPECIAL PROVISION (MIXTURE PAY ADJUSTMENT)(N.A.B.I.)	900.650	-

DETAILED SUMMARY OF QUANTITIES

QUANTITIES	UNIT	ITEMS

PROJECT NAME: DERBY
PROJECT NUMBER: IM 091-3(49)

FILE NAME: s12a274forms.dgn
PROJECT LEADER: C. CARLSON
DESIGNED BY: D. PETERSON
QUANTITY SHEET (2)

PLOT DATE: 02-JUN-2017
DRAWN BY: G. ROY
CHECKED BY: D. PETERSON
SHEET 6 OF 73

STATE OF VERMONT
AGENCY OF TRANSPORTATION

QUANTITY SHEET 3

SUMMARY OF ESTIMATED QUANTITIES									TOTALS		DESCRIPTIONS				DETAILED SUMMARY OF QUANTITIES		
						ROADWAY	EROSION CONTROL	BRIDGE	FULL C.E. ITEMS	GRAND TOTAL	FINAL	UNIT	ITEMS	ITEM NUMBER	ROUND	QUANTITIES	UNIT	ITEMS
						24				24		TON	SPECIAL PROVISION (BITUMINOUS CONCRETE PAVEMENT, SMALL QUANTITY)	900.680	0.26			
						97		198		295		TON	SPECIAL PROVISION (BITUMINOUS CONCRETE PAVEMENT, TYPE IVB)	900.680	1.23			

PROJECT NAME: DERBY
PROJECT NUMBER: IM 091-3(49)

FILE NAME: s12a274forms.dgn
PROJECT LEADER: C. CARLSON
DESIGNED BY: D. PETERSON
QUANTITY SHEET (3)

PLOT DATE: 02-JUN-2017
DRAWN BY: G. ROY
CHECKED BY: D. PETERSON
SHEET 7 OF 73

STATE OF VERMONT
AGENCY OF TRANSPORTATION

BRIDGE QUANTITY SHEET 1

SUMMARY OF BRIDGE QUANTITIES									TOTALS	DESCRIPTIONS			DETAILED SUMMARY OF QUANTITIES		
DECK	APPROACH SLAB #1	APPROACH SLAB #2	ABUTMENT #1	ABUTMENT #2	PIER #1	PIER #2	PIER #3	BRIDGE TOTAL	UNIT	ITEMS	ITEM NUMBER	QUANTITIES	UNIT	ITEMS
			50	40				90	CY	STRUCTURE EXCAVATION	204.25			
			30	30				60	CY	GRANULAR BACKFILL FOR STRUCTURES	204.30			
3								3	CWT	EMULSIFIED ASPHALT	404.65			
378			4	4				386	CY	CONCRETE, HIGH PERFORMANCE CLASS A	501.33			
	32	32	37	34	26	26	27	214	CY	CONCRETE, HIGH PERFORMANCE CLASS B	501.34			
1								1	LS	SHORING SUPERSTRUCTURE (STATION 150+01.00)	502.10			
1								1	LS	SHORING SUPERSTRUCTURE (STATION 150+80.00)	502.10			
1								1	LS	SHORING SUPERSTRUCTURE (STATION 151+49.00)	502.10			
1								1	LS	SHORING SUPERSTRUCTURE (STATION 152+28.00)	502.10			
426870								426870	LB	STRUCTURAL STEEL, PLATE GIRDER	506.55			
	3960	3960			6020	6000	6060	26000	LB	REINFORCING STEEL, LEVEL I	507.11			
95770			4710	4610				105090	LB	REINFORCING STEEL, LEVEL III	507.13			
			198	203	98	98	98	695	LF	DRILLING AND GROUTING DOWELS	507.16			
			23	29	11	11	11	85	EACH	MECHANICAL BAR CONNECTOR (#5 EPOXY COATED)	507.19			
					8	8	8	24	EACH	MECHANICAL BAR CONNECTOR (#7 EPOXY COATED)	507.19			
					16	16	16	48	EACH	MECHANICAL BAR CONNECTOR (#9 EPOXY COATED)	507.19			
1								1	LS	SHEAR CONNECTORS (5520 - 7/8" X 7")	508.15			
24			2	2	2	2	2	34	GAL	WATER REPELLENT, SILANE	514.10			
			45	45				90	LF	BRIDGE EXPANSION JOINT, VERMONT	516.11			
1190								1190	SY	SHEET MEMBRANE WATERPROOFING, TORCH APPLIED	519.20			
	40	40						80	LF	JOINT SEALER, HOT POURED	524.11			
1								1	LS	MAINTENANCE OF STRUCTURES AND APPROACHES	527.10			
1								1	EACH	PARTIAL REMOVAL OF STRUCTURE	529.20			
			6	6	6	6	6	30	EACH	BEARING DEVICE ASSEMBLY, STEEL REINFORCED ELASTOMERIC PAD	531.17			
					2	2	2	6	SY	REPAIR OF CONCRETE SUBSTRUCTURE SURFACE, CLASS I	580.13			
					2	2	2	6	SY	REPAIR OF CONCRETE SUBSTRUCTURE SURFACE, CLASS II	580.14			
294								294	LF	SNOW BARRIER	620.75			
669								669	LF	SPECIAL PROVISION (BRIDGE RAILING, GALVANIZED 3 RAIL BOX BEAM, CURB MOUNTED)	900.640			
198								198	TON	SPECIAL PROVISION (BITUMINOUS CONCRETE PAVEMENT, TYPE IVB)	900.680			

PROJECT NAME: DERBY
PROJECT NUMBER: IM 091-3(49)

FILE NAME: s12a274forms.dgn
PROJECT LEADER: C. CARLSON
DESIGNED BY: D. PETERSON
BRIDGE QUANTITY SHEET

PLOT DATE: 02-JUN-2017
DRAWN BY: G. ROY
CHECKED BY: D. PETERSON
SHEET 8 OF 73

GENERAL INFORMATION

SYMBOLOGY LEGEND NOTE

THE SYMBOLOGY ON THIS SHEET IS INTENDED TO COVER STANDARD CONVENTIONAL SYMBOLOGY. THE SYMBOLOGY IS USED FOR EXISTING & PROPOSED FEATURES WITH HEAVIER LINEWEIGHT, IN COMBINATION WITH PROJECT ANNOTATION, AS NOTED ON PROJECT PLAN SHEETS. THIS LEGEND SHEET COVERS THE BASICS. SYMBOLOGY ON PLANS MAY VARY, PLAN ANNOTATIONS AND NOTES SHOULD BE USED TO CLARIFY AS NEEDED.

R.O.W. ABBREVIATIONS (CODES) & SYMBOLS

POINT	CODE	DESCRIPTION
	CH	CHANNEL EASEMENT
	CONST	CONSTRUCTION EASEMENT
	CUL	CULVERT EASEMENT
	D&C	DISCONNECT & CONNECT
	DIT	DITCH EASEMENT
	DR	DRAINAGE EASEMENT
	DRIVE	DRIVEWAY EASEMENT
	EC	EROSION CONTROL
	HWY	HIGHWAY EASEMENT
	I&M	INSTALL & MAINTAIN EASEMENT
	LAND	LANDSCAPE EASEMENT
	R&RES	REMOVE & RESET
	R&REP	REMOVE & REPLACE
	SR	SLOPE RIGHT
	UE	UTILITY EASEMENT
	(P)	PERMANENT EASEMENT
	(T)	TEMPORARY EASEMENT
■	BNDNS	BOUND SET
⊡	BNDNS	BOUND TO BE SET
◎	IPNF	IRON PIN FOUND
●	IPNS	IRON PIN TO BE SET
⊠	CALC	EXISTING ROW POINT
○	PROW	PROPOSED ROW POINT
[LENGTH]		LENGTH CARRIED ON NEXT SHEET

COMMON TOPOGRAPHIC POINT SYMBOLS

POINT	CODE	DESCRIPTION
	APL	BOUND APPARENT LOCATION
	BM	BENCHMARK
	BND	BOUND
	CB	CATCH BASIN
	COMB	COMBINATION POLE
	DITHR	DROP INLET THROATED DNC
	EL	ELECTRIC POWER POLE
	FPOLE	FLAGPOLE
	GASFIL	GAS FILLER
	GP	GUIDE POST
	GSO	GAS SHUT OFF
	GUY	GUY POLE
	GUYW	GUY WIRE
	GV	GATE VALVE
	H	TREE HARDWOOD
	HCTRL	CONTROL HORIZONTAL
	HVCTRL	CONTROL HORIZ. & VERTICAL
	HYD	HYDRANT
	IP	IRON PIN
	IPIPE	IRON PIPE
	LI	LIGHT - STREET OR YARD
	MB	MAILBOX
	MH	MANHOLE (MH)
	MM	MILE MARKER
	PM	PARKING METER
	PMK	PROJECT MARKER
	POST	POST STONE/WOOD
	RRSIG	RAILROAD SIGNAL
	RRSL	RAILROAD SWITCH LEVER
	S	TREE SOFTWOOD
	SAT	SATELLITE DISH
	SHRUB	SHRUB
	SIGN	SIGN
	STUMP	STUMP
	TEL	TELEPHONE POLE
	TIE	TIE
	TSIGN	SIGN W/DOUBLE POST
	VCTRL	CONTROL VERTICAL
	WELL	WELL
	WSO	WATER SHUT OFF

THESE ARE COMMON VAOT SURVEY POINT SYMBOLS FOR EXISTING FEATURES, ALSO USED FOR PROPOSED FEATURES WITH HEAVIER LINEWEIGHT, IN COMBINATION WITH PROPOSED ANNOTATION.

PROPOSED GEOMETRY CODES

CODE	DESCRIPTION
PC	POINT OF CURVATURE
PI	POINT OF INTERSECTION
CC	CENTER OF CURVE
PT	POINT OF TANGENCY
PCC	POINT OF COMPOUND CURVE
PRC	POINT OF REVERSE CURVE
POB	POINT OF BEGINNING
POE	POINT OF ENDING
STA	STATION PREFIX
AH	AHEAD STATION SUFFIX
BK	BACK STATION SUFFIX
D	CURVE DEGREE OF (100FT)
R	CURVE RADUIS OF
T	CURVE TANGENT LENGTH
L	CURVE LENGTH OF
E	CURVE EXTERNAL DISTANCE

UTILITY SYMBOLOGY

UNDERGROUND UTILITIES

UGU	UTILITY (GENERIC-UNKNOWN)
UT	TELEPHONE
UE	ELECTRIC
UC	CABLE (TV)
UEC	ELECTRIC+CABLE
UET	ELECTRIC+TELEPHONE
UCT	CABLE+TELEPHONE
UECT	ELECTRIC+CABLE+TELEP.
G	GAS LINE
W	WATER LINE
S	SANITARY SEWER (SEPTIC)

ABOVE GROUND UTILITIES (AERIAL)

AGU	UTILITY (GENERIC-UNKNOWN)
T	TELEPHONE
E	ELECTRIC
C	CABLE (TV)
EC	ELECTRIC+CABLE
ET	ELECTRIC+TELEPHONE
AER E&T	ELECTRIC+TELEPHONE
CT	CABLE+TELEPHONE
ECT	ELECTRIC+CABLE+TELEP.
	UTILITY POLE GUY WIRE

PROJECT CONSTRUCTION SYMBOLOGY

PROJECT DESIGN & LAYOUT SYMBOLOGY

CZ	CLEAR ZONE
	PLAN LAYOUT MATCHLINE

PROJECT CONSTRUCTION FEATURES

	TOP OF CUT SLOPE
	TOE OF FILL SLOPE
	STONE FILL
	BOTTOM OF DITCH ℄
	CULVERT PROPOSED
	STRUCTURE SUBSURFACE
PDF PDF	PROJECT DEMARCATION FENCE
BF BF	BARRIER FENCE
	TREE PROTECTION ZONE (TPZ)
	STRIPING LINE REMOVAL
	SHEET PILES

CONVENTIONAL BOUNDARY SYMBOLOGY

BOUNDARY LINES

TOWN LINE	TOWN BOUNDARY LINE
COUNTY LINE	COUNTY BOUNDARY LINE
STATE LINE	STATE BOUNDARY LINE
	PROPOSED STATE R.O.W. (LIMITED ACCESS)
	PROPOSED STATE R.O.W.
	STATE ROW (LIMITED ACCESS)
	STATE ROW
	TOWN ROW
	PERMANENT EASEMENT LINE (P)
	TEMPORARY EASEMENT LINE (T)
	SURVEY LINE
P/L P/L	PROPERTY LINE (P/L)
SR SR SR	SLOPE RIGHTS
6f 6f	6F PROPERTY BOUNDARY
4f 4f	4F PROPERTY BOUNDARY
HAZ HAZ	HAZARDOUS WASTE

EPSC LAYOUT PLAN SYMBOLOGY

EPSC MEASURES

	FILTER CURTAIN
	SILT FENCE
	SILT FENCE WOVEN WIRE
	CHECK DAM
	DISTURBED AREAS REQUIRING RE-VEGETATION
	EROSION MATTING

SEE EPSC DETAIL SHEETS FOR ADDITIONAL SYMBOLOGY

ENVIRONMENTAL RESOURCES

	WETLAND BOUNDARY
	RIPARIAN BUFFER ZONE
	WETLAND BUFFER ZONE
	SOIL TYPE BOUNDARY
T&E	THREATENED & ENDANGERED SPECIES
HAZ HAZ	HAZARDOUS WASTE AREA
AG	AGRICULTURAL LAND
HABITAT	FISH & WILDLIFE HABITAT
FLOOD PLAIN	FLOOD PLAIN
OHW	ORDINARY HIGH WATER (OHW)
	STORM WATER
	USDA FOREST SERVICE LANDS
	WILDLIFE HABITAT SUIT/CONN

ARCHEOLOGICAL & HISTORIC

ARCH	ARCHEOLOGICAL BOUNDARY
HISTORIC DIST	HISTORIC DISTRICT BOUNDARY
HISTORIC	HISTORIC AREA
H	HISTORIC STRUCTURE

CONVENTIONAL TOPOGRAPHIC SYMBOLOGY

EXISTING FEATURES

	ROAD EDGE PAVEMENT
	ROAD EDGE GRAVEL
	DRIVEWAY EDGE
	DITCH
	FOUNDATION
	FENCE (EXISTING)
	FENCE WOOD POST
	FENCE STEEL POST
	GARDEN
	ROAD GUARDRAIL
	RAILROAD TRACKS
	CULVERT (EXISTING)
	STONE WALL
	WALL
	WOOD LINE
	BRUSH LINE
	HEDGE
	BODY OF WATER EDGE
	LEDGE EXPOSED

PROJECT NAME: DERBY
PROJECT NUMBER: IM 091-3(49)

FILE NAME: s12a274forms.dgn
PROJECT LEADER: C. CARLSON
DESIGNED BY: D. PETERSON
CONVENTIONAL SYMBOLOGY LEGEND

PLOT DATE: 02-JUN-2017
DRAWN BY: M. LONGSTREET
CHECKED BY: J. LACY
SHEET 9 OF 73

GPS CONTROL POINTS

PT #1 191 EXIT 29 AZ MK

NORTH = 912425.9000
EAST = 1745663.3300
ELEV. = 1154.400

DERBY, VT. ABOUT 120 M W OF THE MOST NORTHERLY U-TURN ON 191, IN THE TOP OF A 0.9 M X 0.7 M ROCK OUTCROP. IT IS 6.4 M N OF AND ABOUT 2.0 M LOWER THAN THE I-91 NB NORTH EDGE OF PAVEMENT, 8.1 M S OF THE I-91 SB SOUTH EDGE OF PAVEMENT, 36.4 M E OF A 60 CM SQUARE METAL DRAIN WITH METAL DELINEATOR, 54.3 M WEST OF THE CENTER OF A 75 CM DIAMETER CONC DRAIN WITH A COVER OF TWO 0.6 M X 1.0 M LOOSE CONC SLABS, AND 0.7 M N OF A FIBERGLASS WITNESS

PT #2 191 EXIT 29

NORTH = 913434.6300
EAST = 1747284.9600
ELEV. = 1135.930

DERBY, VT. AT THE END OF THE I-91 NORTHBOUND ON/OFF RAMP AT EXIT 29. 20.7 M SOUTHWEST OF AND ABOUT 1.2 M LOWER THAN THE CL OF CASWELL AVENUE, 8.3 M NORTHWEST OF THE CL OF THE ON/OFF RAMP, 15.2 M SOUTH SOUTHEAST OF THE MOST EASTERLY METAL POST FOR A GUARD RAIL, 32.8 M NORTHWEST OF AND ACROSS THE RAMP FROM THE NORTH END OF A RIGHT-OF-WAY FENCE, 5.6 M SOUTH OF A STOP SIGN, 6.3 M NORTH NORTHWEST OF A TWO-WAY TRAFFIC SIGN, AND 0.3 M SOUTHEAST OF A FIBERGLASS WITNESS POST.

TRAVERSE TIES

NORTH =	NORTH =	NORTH =
EAST =	EAST =	EAST =
ELEV. =	ELEV. =	ELEV. =

NORTH =	NORTH =	NORTH =
EAST =	EAST =	EAST =
ELEV. =	ELEV. =	ELEV. =

CONTROL LINE DATA - TH-1_CL

POINT ID	BEARING	DISTANCE (FEET)	NORTHING (Y)	EASTING (X)	PC	PI	PT
2	N 86°45'00.00" E	600.00 '	913464.2438	1746583.3034		148+00.00	
4			913498.2595	1747182.3384		154+00.00	

DATUM

VERTICAL NAVD88
HORIZONTAL NAD83(2011)
ADJUSTMENT COMPASS

PROJECT NAME: DERBY
PROJECT NUMBER: IM 091-3(49)

FILE NAME: xl2a274TI.dgn
PROJECT LEADER: C. CARLSON
DESIGNED BY: M. E-MONGEON
TIE SHEET

PLOT DATE: 02-JUN-2017
DRAWN BY: C. CYR
CHECKED BY: P. BEYOR
SHEET 10 OF 73

COLD PLANING, BITUMINOUS PAVEMENT

TH 1 STA 148+75.0 - STA 149+25.0
TH 1 STA 153+15.0 - STA 153+65.0

CAST-IN-PLACE CONCRETE CURB, TYPE B

TH 1 STA 149+14.2 - STA 149+43.2 RT
TH 1 STA 149+35.1 - STA 149+64.1 LT
TH 1 STA 152+74.4 - STA 153+03.4 RT
TH 1 STA 152+95.3 - STA 153+24.3 LT

REMOVING AND RESETTING FENCE

TH 1 STA 149+31.0 - STA 149+50.0 RT
TH 1 STA 149+71.0 - STA 149+78.0 LT
TH 1 STA 152+57.0 - STA 152+68.0 RT
TH 1 STA 152+88.0 - STA 152+98.0 LT

SNOW BARRIER

TH 1 STA 149+86.3 - STA 150+59.7 RT
TH 1 STA 150+23.8 - STA 150+97.2 LT
TH 1 STA 151+25.0 - STA 151+98.4 RT
TH 1 STA 151+62.4 - STA 152+35.9 LT

STEEL BEAM GUARDRAIL, GALVANIZED

TH 1 STA 148+62.8 - STA 149+25.1 RT
TH 1 STA 148+83.5 - STA 149+46.0 LT
TH 1 STA 152+92.5 - STA 153+54.8 RT
TH 1 STA 153+13.4 - STA 153+75.9 LT
I 91 STA 10+97.1 - STA 11+86.0 LT
I 91 STA 11+18.8 - STA 11+81.2 RT

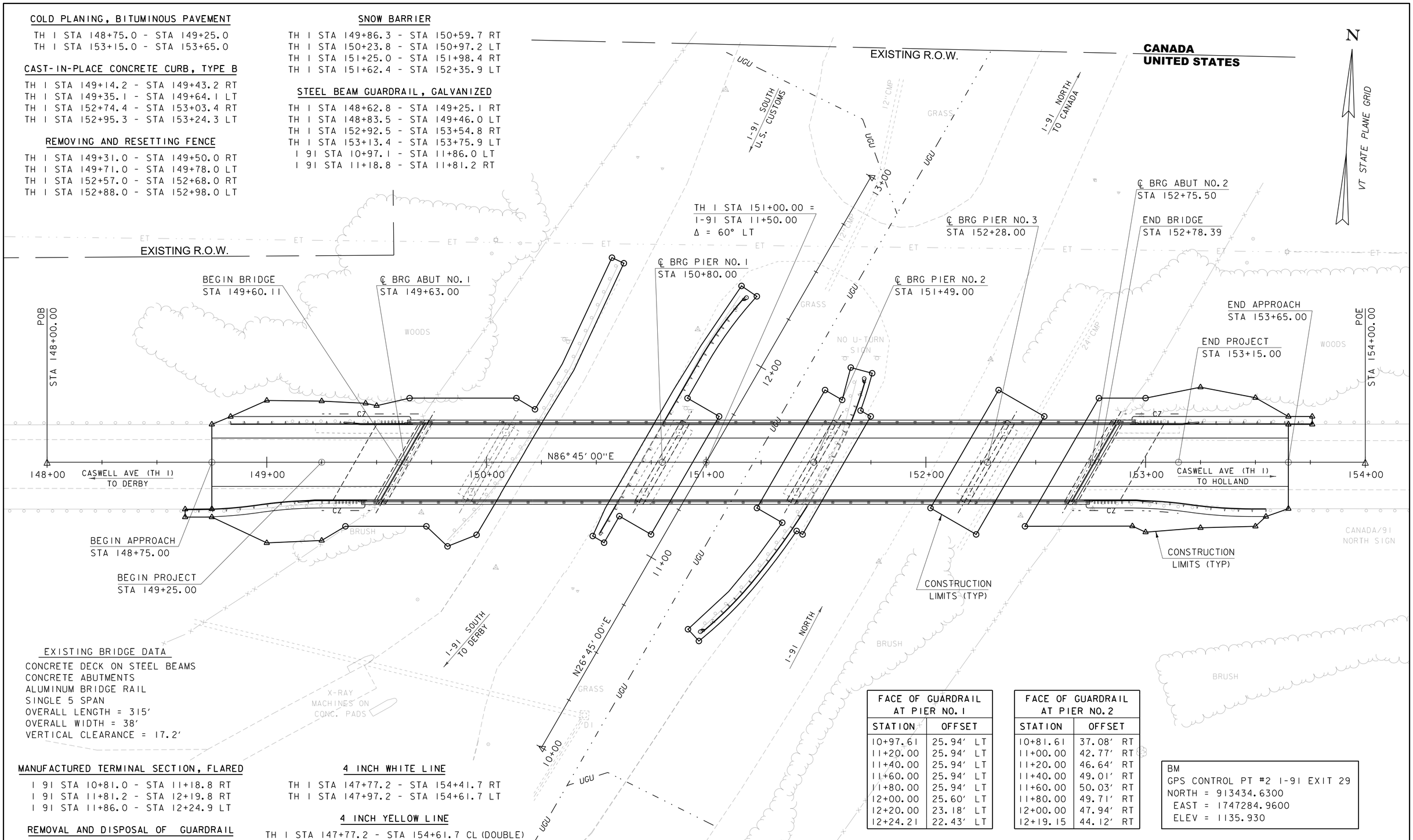

EXISTING BRIDGE DATA

CONCRETE DECK ON STEEL BEAMS
CONCRETE ABUTMENTS
ALUMINUM BRIDGE RAIL
SINGLE 5 SPAN
OVERALL LENGTH = 315'
OVERALL WIDTH = 38'
VERTICAL CLEARANCE = 17.2'

MANUFACTURED TERMINAL SECTION, FLARED

I 91 STA 10+81.0 - STA 11+18.8 RT
I 91 STA 11+81.2 - STA 12+19.8 RT
I 91 STA 11+86.0 - STA 12+24.9 LT

REMOVAL AND DISPOSAL OF GUARDRAIL

TH 1 STA 148+61.8 - STA 149+43.0 RT
TH 1 STA 148+82.6 - STA 149+63.9 LT
TH 1 STA 152+74.4 - STA 153+55.8 RT
TH 1 STA 152+95.6 - STA 153+76.8 LT
I 91 STA 10+60.4 - STA 12+07.5 LT
I 91 STA 10+97.1 - STA 12+23.4 LT
I 91 STA 10+80.8 - STA 12+16.7 RT

4 INCH WHITE LINE

TH 1 STA 147+77.2 - STA 154+41.7 RT
TH 1 STA 147+97.2 - STA 154+61.7 LT

4 INCH YELLOW LINE

TH 1 STA 147+77.2 - STA 154+61.7 CL (DOUBLE)

SPECIAL PROVISION (BRIDGE RAILING, GALVANIZED 3 RAIL BOX BEAM, CURB MOUNTED)

TH 1 STA 149+41.8 - STA 152+75.9 RT
TH 1 STA 149+62.6 - STA 152+96.7 LT

SPECIAL PROVISION (GUARDRAIL APPROACH SECTION, THRIE-BEAM TO GALVANIZED 3 RAIL BOX BEAM)

TH 1 STA 149+25.1 - STA 149+45.8 RT
TH 1 STA 149+46.0 - STA 149+66.6 LT
TH 1 STA 152+71.8 - STA 153+92.5 RT
TH 1 STA 152+92.7 - STA 153+13.4 LT

FACE OF GUARDRAIL AT PIER NO. 1

STATION	OFFSET
10+97.61	25.94' LT
11+20.00	25.94' LT
11+40.00	25.94' LT
11+60.00	25.94' LT
11+80.00	25.94' LT
12+00.00	25.60' LT
12+20.00	23.18' LT
12+24.21	22.43' LT

FACE OF GUARDRAIL AT PIER NO. 2

STATION	OFFSET
10+81.61	37.08' RT
11+00.00	42.77' RT
11+20.00	46.64' RT
11+40.00	49.01' RT
11+60.00	50.03' RT
11+80.00	49.71' RT
12+00.00	47.94' RT
12+19.15	44.12' RT

BM
GPS CONTROL PT #2 I-91 EXIT 29
NORTH = 913434.6300
EAST = 1747284.9600
ELEV = 1135.930

SCALE 1" = 20'-0"
20 0 20

PROJECT NAME: DERBY
PROJECT NUMBER: IM 091-3(49)

FILE NAME: s12a274bdr.dgn
PROJECT LEADER: C. CARLSON
DESIGNED BY: D. PETERSON
LAYOUT

PLOT DATE: 02-JUN-2017
DRAWN BY: G. ROY
CHECKED BY: J. LACY
SHEET 11 OF 73

TH 1 VERTICAL PROFILE

HORIZONTAL SCALE: 1" = 20'-0"
VERTICAL SCALE: 1" = 10'-0"

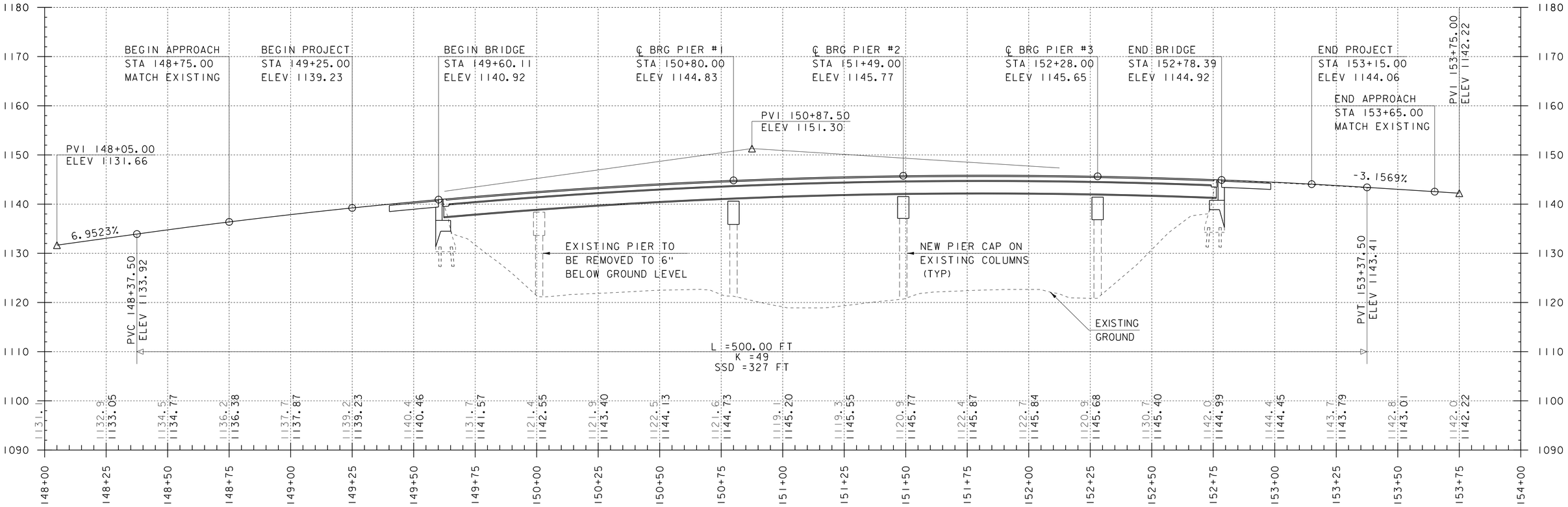

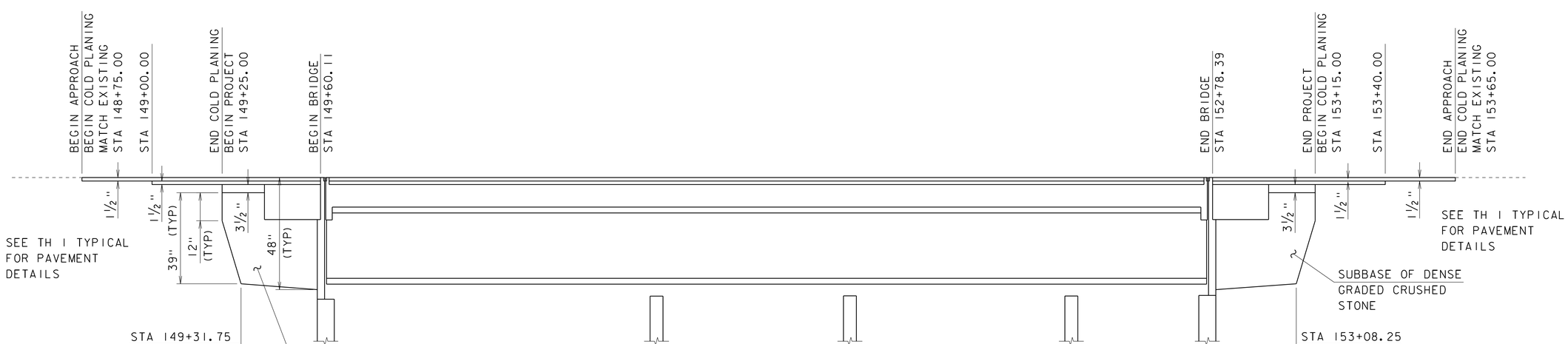

NOTE:

ELEVATIONS SHOWN TO THE NEAREST TENTH ARE EXISTING GROUND ALONG PROPOSED CENTERLINE.

ELEVATIONS SHOWN TO THE NEAREST HUNDREDTH ARE FINISH GRADES ALONG PROPOSED CENTERLINE.

TH 1 MATERIAL TRANSITION DETAIL

HORIZONTAL SCALE: 1" = 20'-0"
VERTICAL SCALE: 1" = 2'-0"

PROJECT NAME: DERBY	
PROJECT NUMBER: IM 091-3(49)	
FILE NAME: s12a274pro.dgn	PLOT DATE: 02-JUN-2017
PROJECT LEADER: C. CARLSON	DRAWN BY: G. ROY
DESIGNED BY: D. PETERSON	CHECKED BY: J. LACY
TH 1 PROFILE AND MATERIAL TRANSITION DETAIL	SHEET 12 OF 73

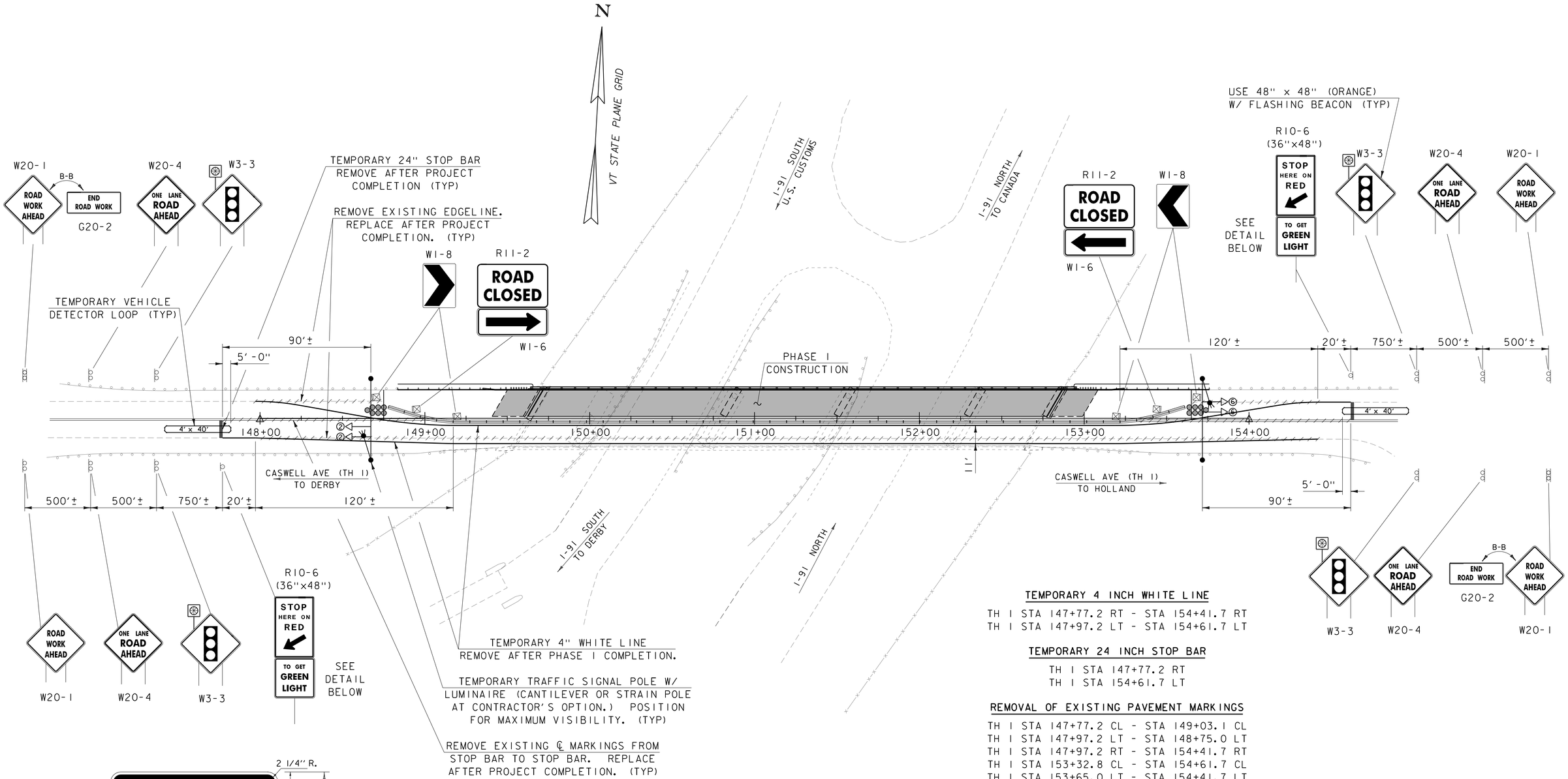

COLORS: BLACK TEXT & BORDER
WHITE REFL. BACKGROUND

MATERIALS: PER STD T-2

TEMPORARY 4 INCH WHITE LINE

TH 1 STA 147+77.2 RT - STA 154+41.7 RT
TH 1 STA 147+97.2 LT - STA 154+61.7 LT

TEMPORARY 24 INCH STOP BAR

TH 1 STA 147+77.2 RT
TH 1 STA 154+61.7 LT

REMOVAL OF EXISTING PAVEMENT MARKINGS

TH 1 STA 147+77.2 CL - STA 149+03.1 CL
TH 1 STA 147+97.2 LT - STA 148+75.0 LT
TH 1 STA 147+97.2 RT - STA 154+41.7 RT
TH 1 STA 153+32.8 CL - STA 154+61.7 CL
TH 1 STA 153+65.0 LT - STA 154+41.7 LT

NOTES:

1. ALL SIGNAL RELATED SIGNS SHALL BE REMOVED OR COVERED WHEN THE SIGNAL IS NOT OPERATING.
2. ITEM LOCATIONS ARE APPROXIMATE.
3. THE CONTRACTOR SHALL BE RESPONSIBLE TO CONFIRM ANY MEASUREMENTS IN THE FIELD.
4. FOLLOW STD T-10 FOR TYPICAL APPROACH SIGNING FOR I-91 SOUTH/NORTH RAMPS AND HERRICK RD.

LEGEND

- — TRAFFIC SIGNAL POLE WITH LUMINAIRE
- — TYPE 3 BARRICADE
- — PAVEMENT MARKING REMOVAL
- — SIGNAL HEAD AND PHASE
- — FLASHING BEACON
- — TEMPORARY TRAFFIC BARRIER
- — ENERGY ABSORPTION ATTENUATOR

SCALE 1" = 30'-0"
30 0 30

PROJECT NAME: DERBY
PROJECT NUMBER: IM 091-3(49)

FILE NAME: s12a274phase1_detour.dgn
PROJECT LEADER: C. CARLSON
DESIGNED BY: D. PETERSON
TEMPORARY TRAFFIC PLAN PHASE 1

PLOT DATE: 02-JUN-2017
DRAWN BY: G. ROY
CHECKED BY: D. PETERSON
SHEET 13 OF 73

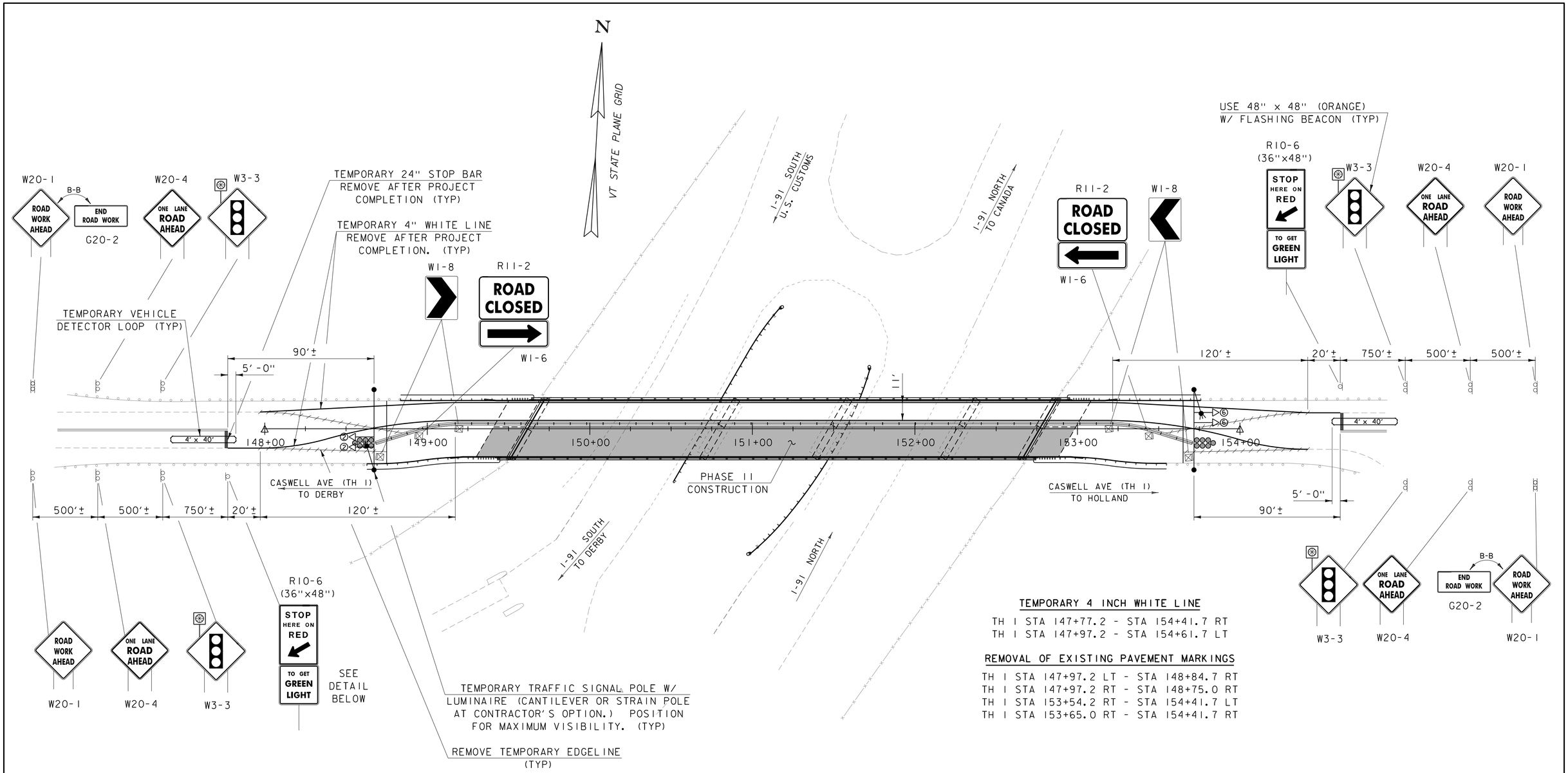

TEMPORARY 4 INCH WHITE LINE

TH 1 STA 147+77.2 - STA 154+41.7 RT
TH 1 STA 147+97.2 - STA 154+61.7 LT

REMOVAL OF EXISTING PAVEMENT MARKINGS

TH 1 STA 147+97.2 LT - STA 148+84.7 RT
TH 1 STA 147+97.2 RT - STA 148+75.0 RT
TH 1 STA 153+54.2 RT - STA 154+41.7 LT
TH 1 STA 153+65.0 RT - STA 154+41.7 RT

PHASING DIAGRAM AND SPECIAL NOTES FOR EACH LOCATION

PHASE	2			6			4		
MINIMUM	10	4	15	10	4	15			
EXTENSION									
MAXIMUM									
HEAD 2	G	Y	R	R	R	R			
HEAD 6	R	R	R	G	Y	R			
HEAD 4									

SPECIAL REQUIREMENTS

APPROACH	TEMPORARY VEHICLE DETECTOR	FLASHING BEACON ON ADVANCED WARNING SIGN
2	X	X
6	X	X

ENTER CHECK MARK IN APPROPRIATE BOX WHEN REQUIRED ON THIS PROJECT

LEGEND

- TRAFFIC SIGNAL POLE WITH LUMINAIRE
- TYPE 3 BARRICADE
- PAVEMENT MARKING REMOVAL
- SIGNAL HEAD AND PHASE
- FLASHING BEACON
- TEMPORARY TRAFFIC BARRIER
- ENERGY ABSORPTION ATTENUATOR

SCALE 1" = 30'-0"
30 0 30

PROJECT NAME: DERBY
PROJECT NUMBER: IM 091-3(49)

FILE NAME: s12a274phase2_detour.dgn
PROJECT LEADER: C. CARLSON
DESIGNED BY: D. PETERSON
TEMPORARY TRAFFIC PLAN PHASE II

PLOT DATE: 02-JUN-2017
DRAWN BY: G. ROY
CHECKED BY: D. PETERSON
SHEET 14 OF 73

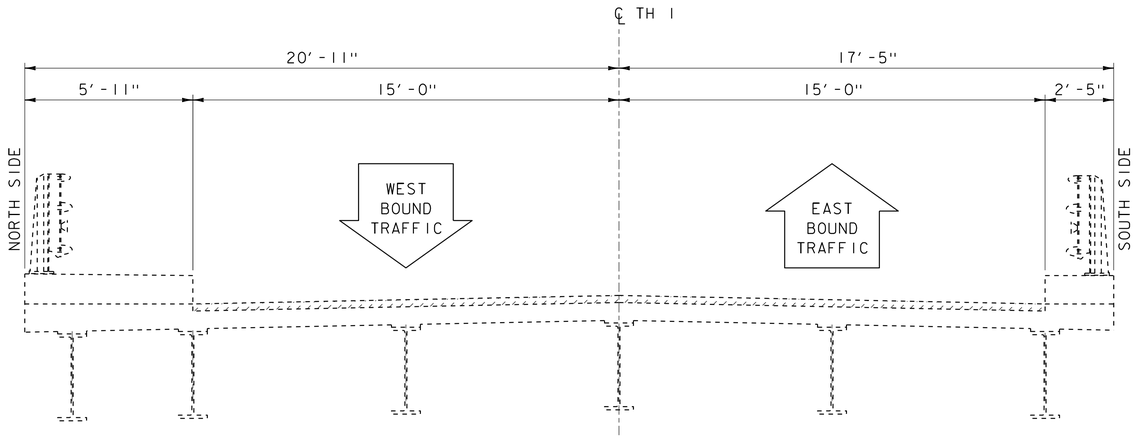

EXISTING TYPICAL - BEFORE

SCALE: 3/8" = 1'-0"

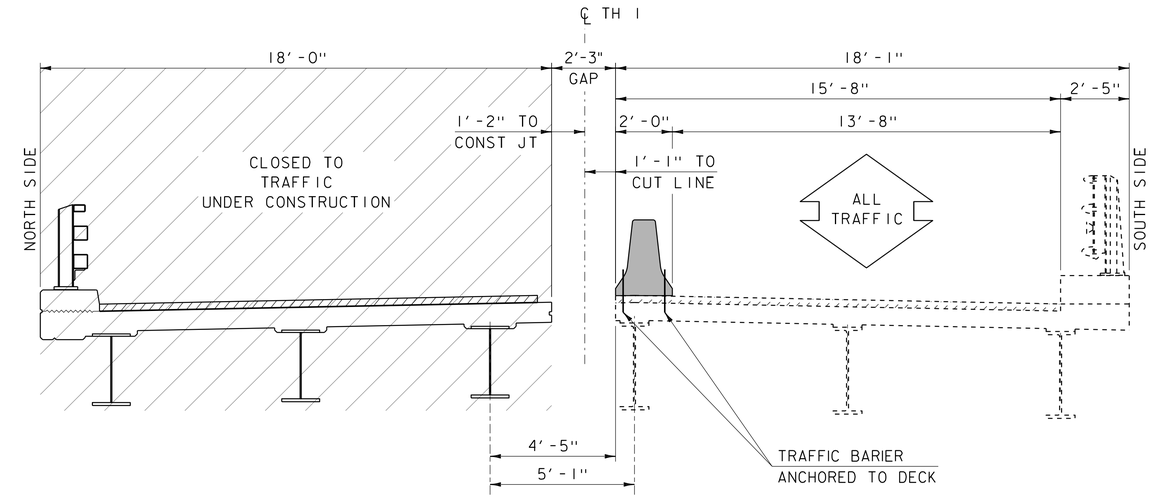

BRIDGE TYPICAL - PHASE I

SCALE: 3/8" = 1'-0"

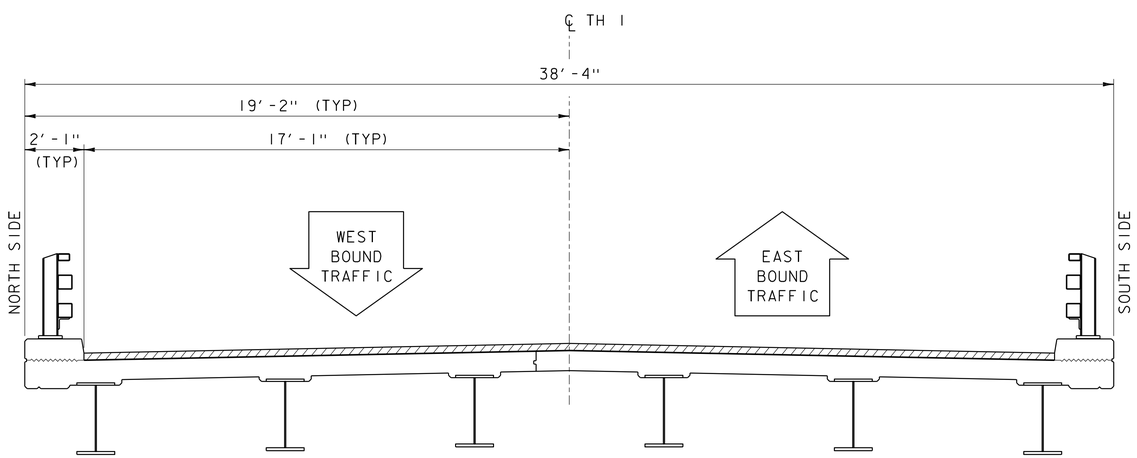

PROPOSED TYPICAL - AFTER

SCALE: 3/8" = 1'-0"

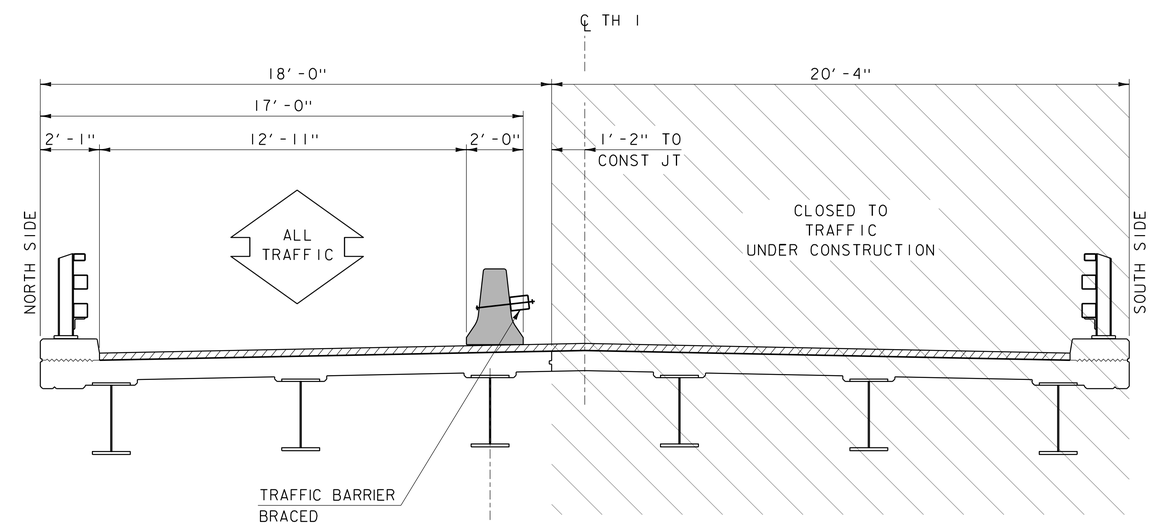

BRIDGE TYPICAL - PHASE II

SCALE: 3/8" = 1'-0"

PROJECT NAME: DERBY	
PROJECT NUMBER: IM 091-3(49)	
FILE NAME: s12a274typ.dgn	PLOT DATE: 02-JUN-2017
PROJECT LEADER: C. CARLSON	DRAWN BY: M. LONGSTREET
DESIGNED BY: D. PETERSON	CHECKED BY: J. LACY
BRIDGE PHASING TYPICALS	SHEET 15 OF 73

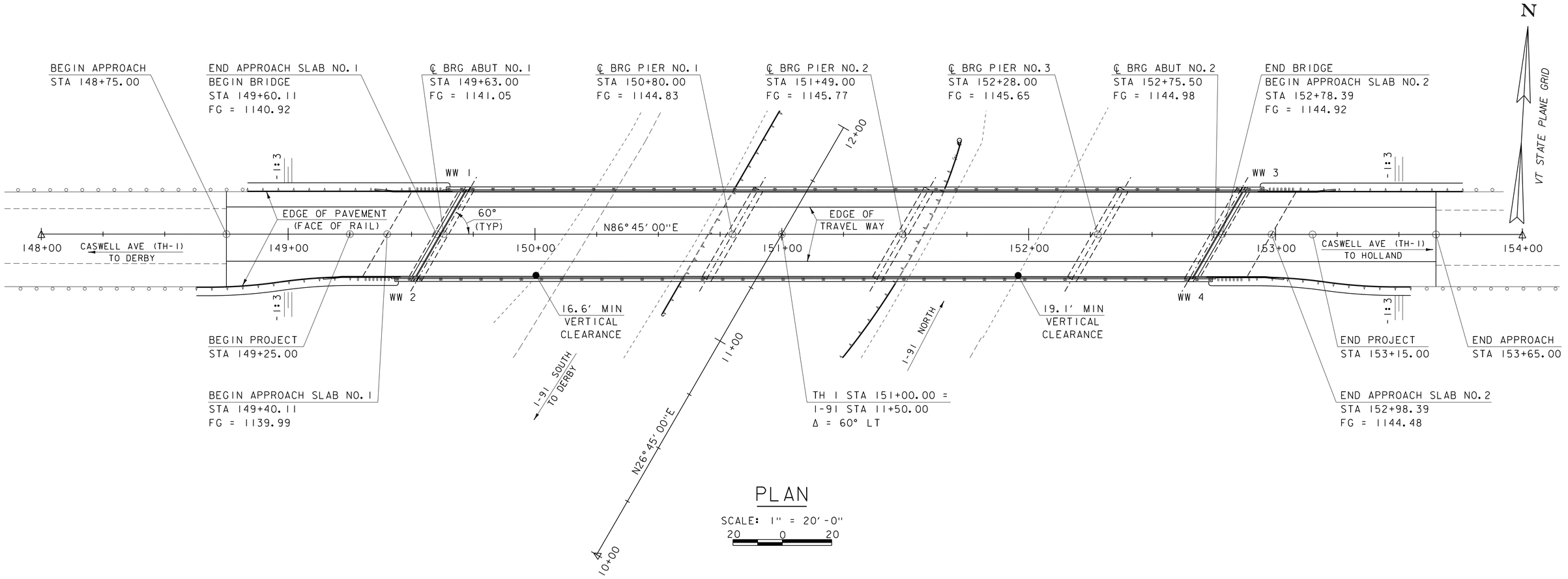

PLAN

SCALE: 1" = 20'-0"
20 0 20

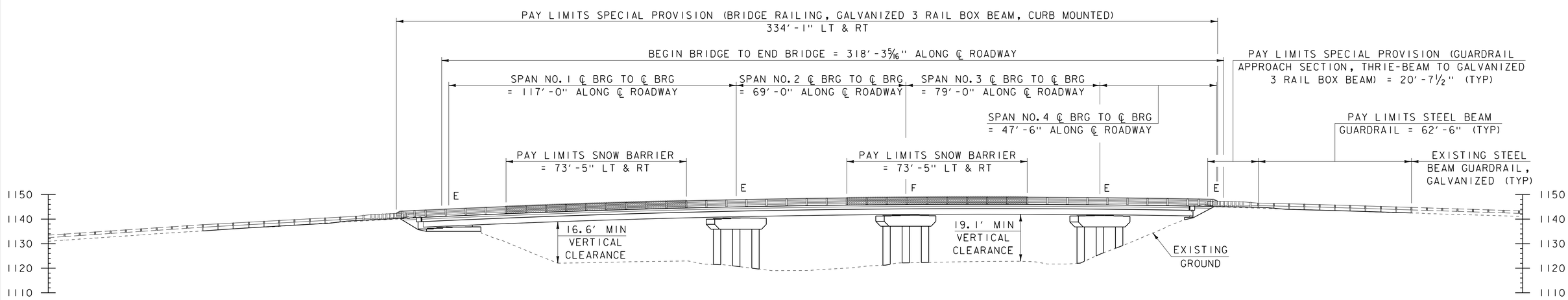

ELEVATION

SCALE: 1" = 20'-0"
20 0 20

PROJECT NAME: DERBY	
PROJECT NUMBER: IM 091-3(49)	
FILE NAME: s12a274pe.dgn	PLOT DATE: 02-JUN-2017
PROJECT LEADER: C. CARLSON	DRAWN BY: G. ROY
DESIGNED BY: D. PETERSON	CHECKED BY: J. LACY
PLAN AND ELEVATION	SHEET 16 OF 73

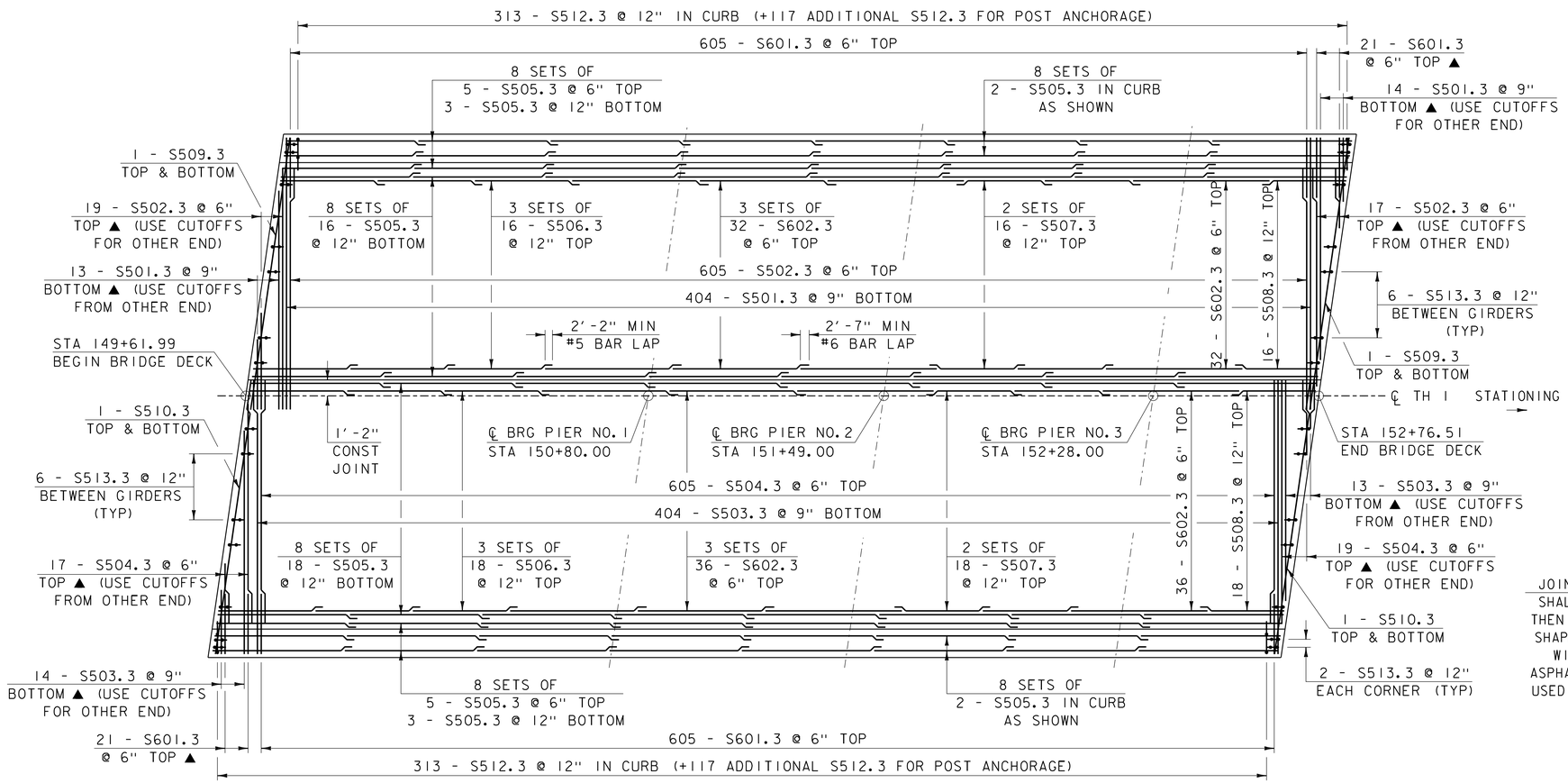

DECK REINFORCING PLAN

HORIZONTAL SCALE: 1" = 20'-0"
VERTICAL SCALE: 1" = 5'-0"

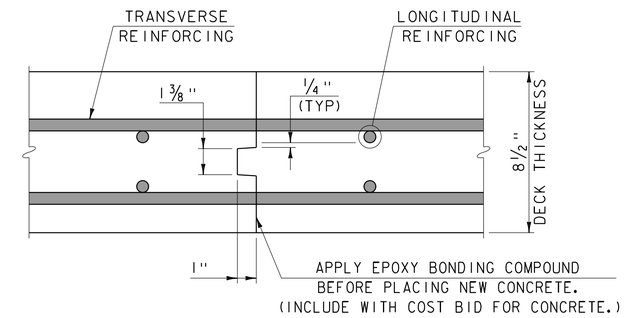

LONGITUDINAL BRIDGE DECK CONSTRUCTION JOINT DETAILS

SCALE: 3" = 1'-0"

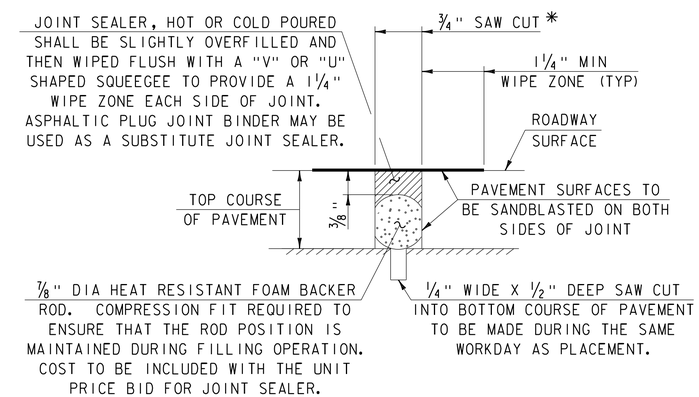

SAWED PAVEMENT JOINT DETAIL

(NOT TO SCALE)

*JOINT IS TO BE LOCATED ACCURATELY BY STRING LINING OR OTHER MEANS, PRIOR TO PAVING, SO THAT THE SAW CUTS WILL BE MADE DIRECTLY OVER THE END OF CONCRETE DECK. JOINT SHALL BE CUT DRY IN A SINGLE PASS AND BE SEALED WITHIN 24 HOURS OR PRIOR TO EXPOSURE TO TRAFFIC. JOINT SHALL BE CLEANED PRIOR TO APPLYING THE JOINT SEALER.

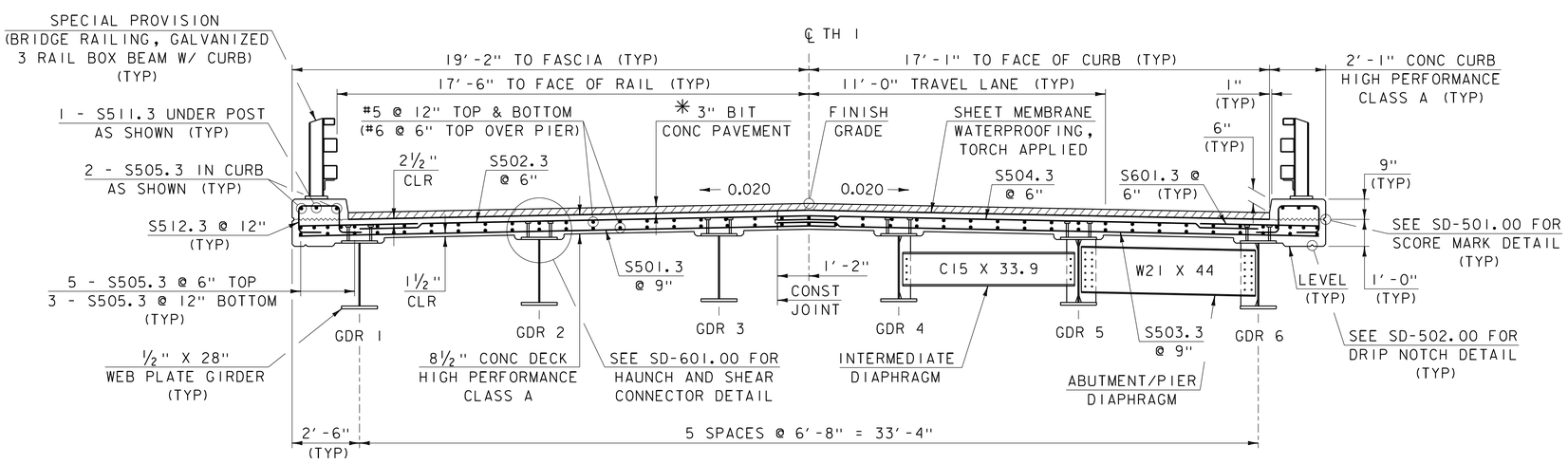

* 1 1/2" TYPE IVB OVER 1 1/2" TYPE IVB

BRIDGE TYPICAL SECTION

SCALE: 3/8" = 1'-0"

NOTE:

▲ = CUT TO FIT IN FIELD
3" CLEAR UNLESS OTHERWISE NOTED
2'-2" BAR LAP UNLESS OTHERWISE NOTED

PROJECT NAME: DERBY	
PROJECT NUMBER: IM 091-3(49)	
FILE NAME: s12a274sup.dgn	PLOT DATE: 02-JUN-2017
PROJECT LEADER: C. CARLSON	DRAWN BY: G. ROY
DESIGNED BY: D. PETERSON	CHECKED BY: J. LACY
BRIDGE DECK DETAILS	SHEET 17 OF 73

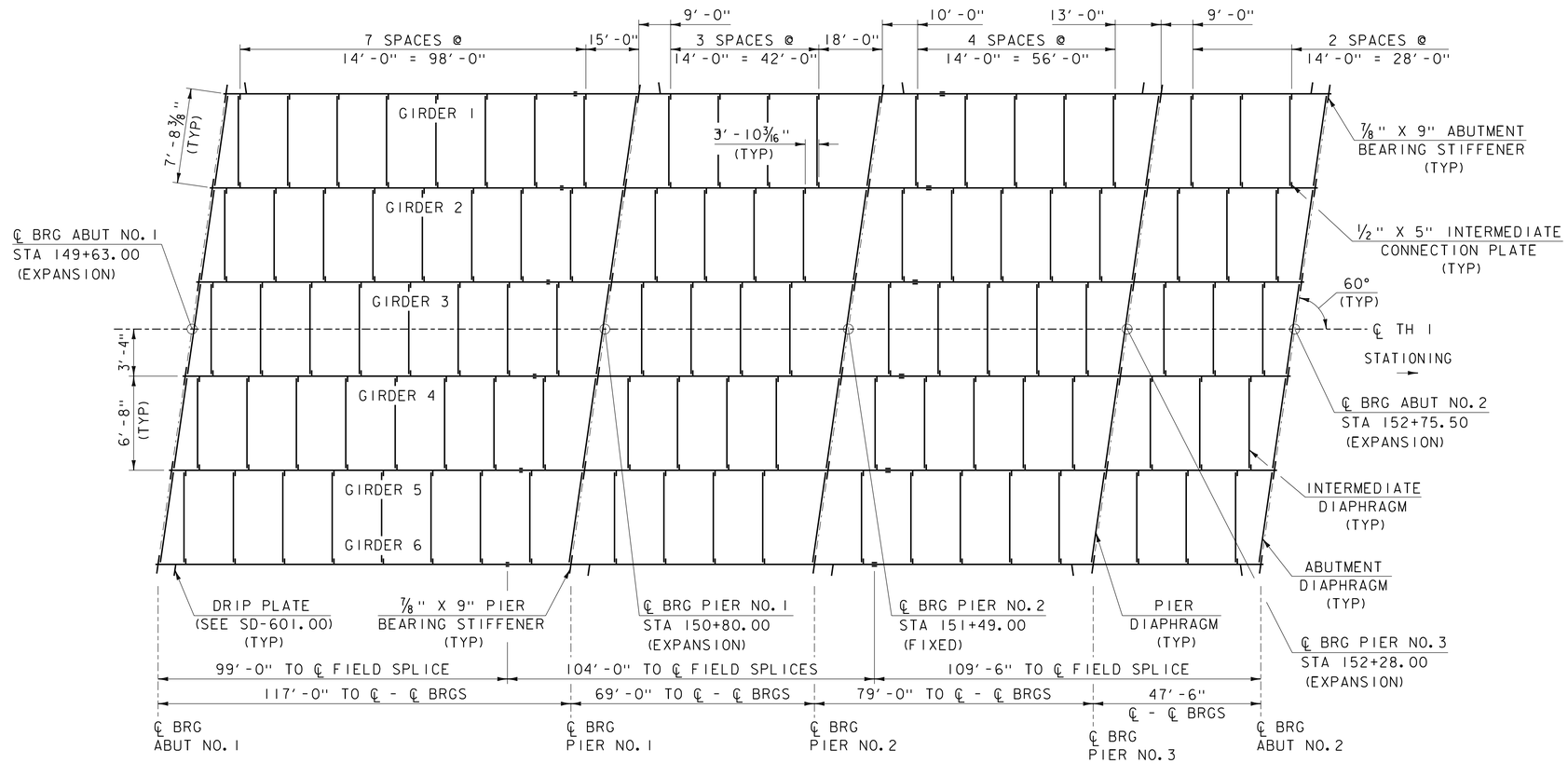

FRAMING PLAN

HORIZONTAL SCALE: 1" = 20'-0"
VERTICAL SCALE: 1" = 5'-0"

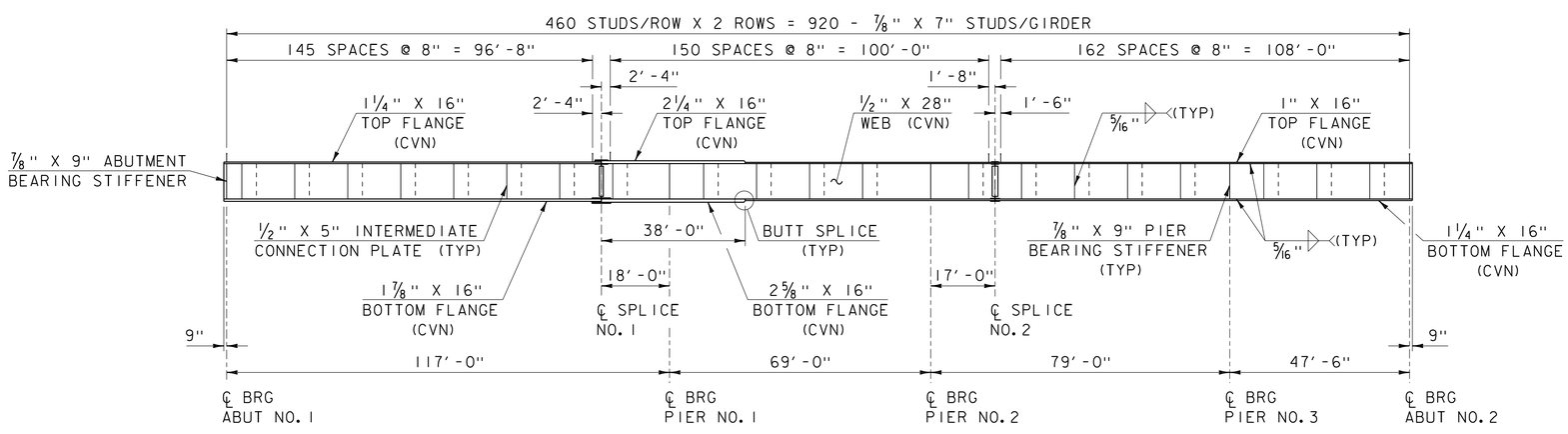

TYPICAL GIRDER ELEVATION

HORIZONTAL SCALE: 1" = 20'-0"
VERTICAL SCALE: 1" = 5'-0"

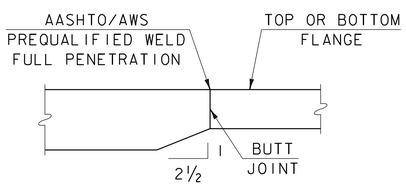

FLANGE BUTT SPLICE DETAIL

NOT TO SCALE

PROJECT NAME: DERBY	
PROJECT NUMBER: IM 091-3(49)	
FILE NAME: sl2a274sup.dgn	PLOT DATE: 02-JUN-2017
PROJECT LEADER: C. CARLSON	DRAWN BY: G. ROY
DESIGNED BY: D. PETERSON	CHECKED BY: J. LACY
FRAMING PLAN AND GIRDER ELEVATION	SHEET 18 OF 73

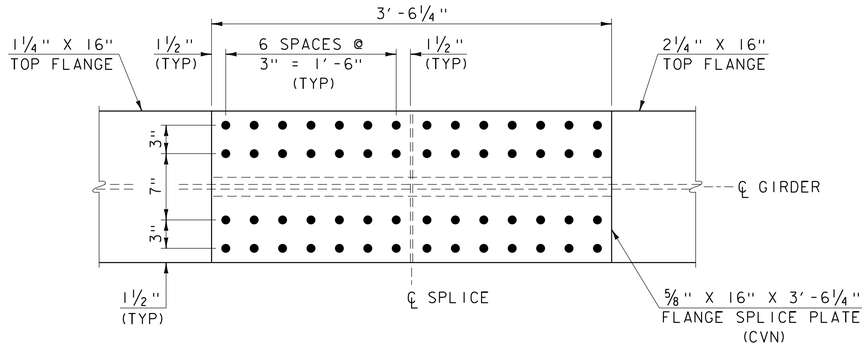

SPLICE ONE TOP FLANGE PLAN

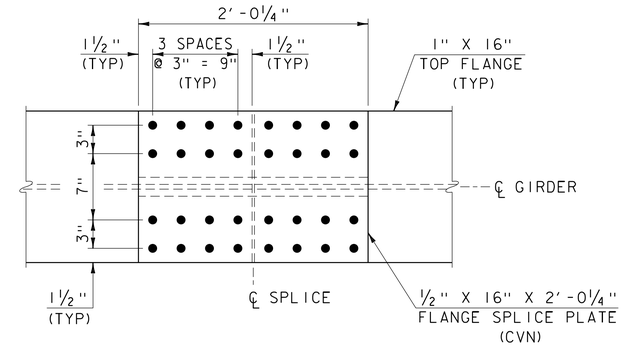

SPLICE TWO TOP FLANGE PLAN

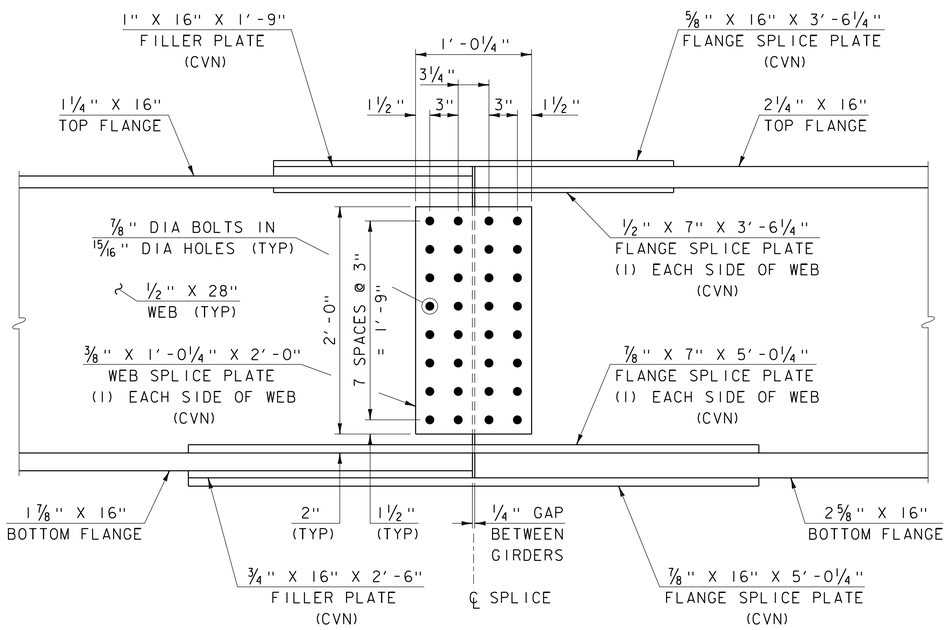

SPLICE ONE WEB ELEVATION

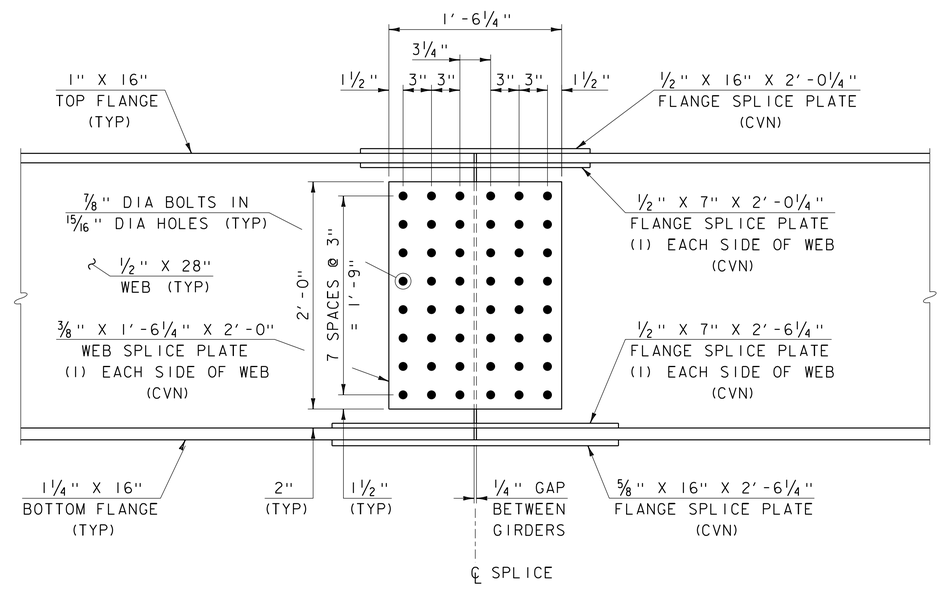

SPLICE TWO WEB ELEVATION

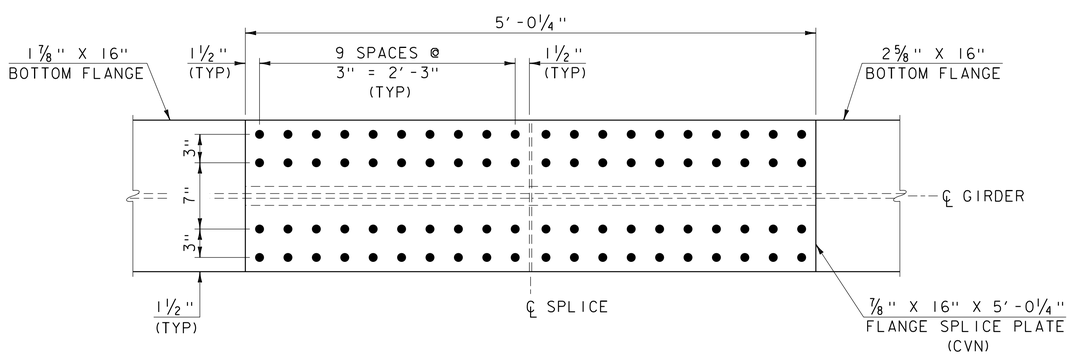

SPLICE ONE BOTTOM FLANGE PLAN

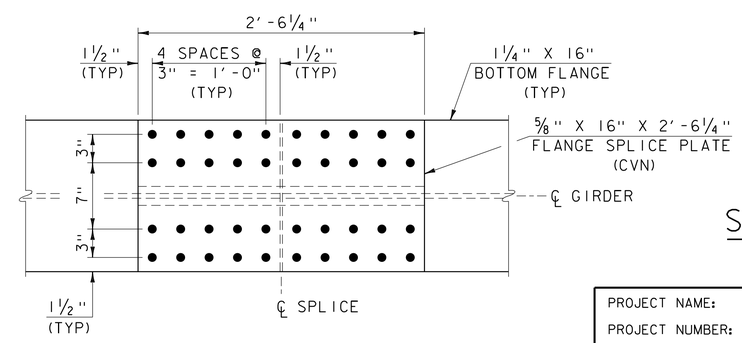

SPLICE TWO BOTTOM FLANGE PLAN

SPLICE DETAILS

SCALE: 1½" = 1'-0"

PROJECT NAME: DERBY	
PROJECT NUMBER: IM 091-3(49)	
FILE NAME: s12a274sup.dgn	PLOT DATE: 02-JUN-2017
PROJECT LEADER: C. CARLSON	DRAWN BY: G. ROY
DESIGNED BY: D. PETERSON	CHECKED BY: J. LACY
SPLICE DETAILS	SHEET 19 OF 73

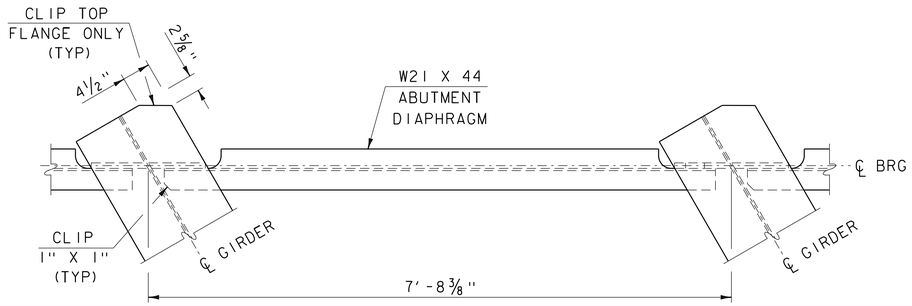

ABUTMENT DIAPHRAGM PLAN

SCALE: 1" = 1'-0"
(PIER DIAPHRAGM SIMILAR)

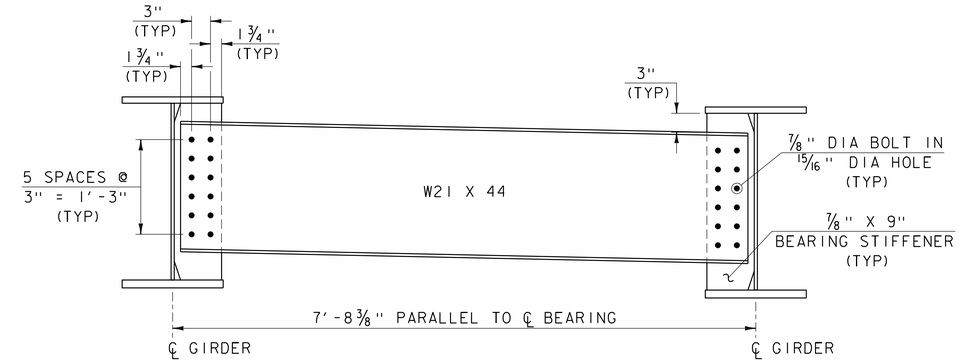

ABUTMENT/PIER DIAPHRAGM

SCALE: 1" = 1'-0"

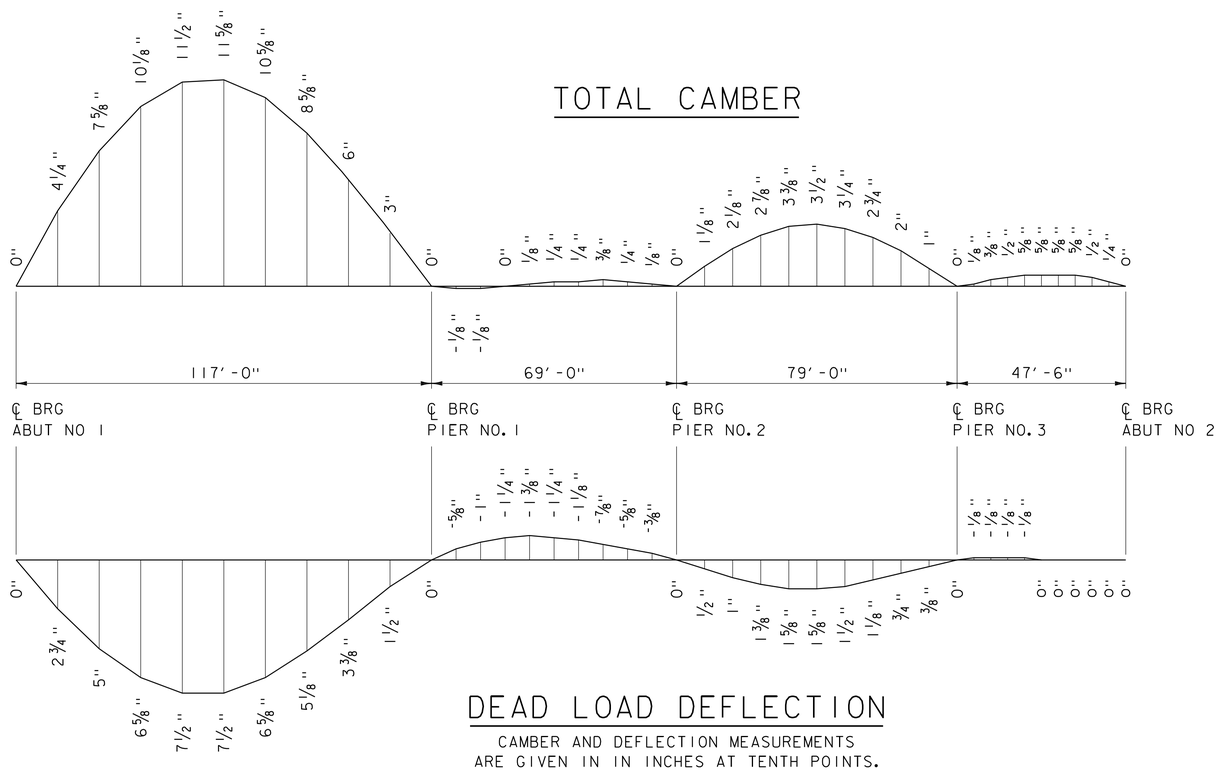

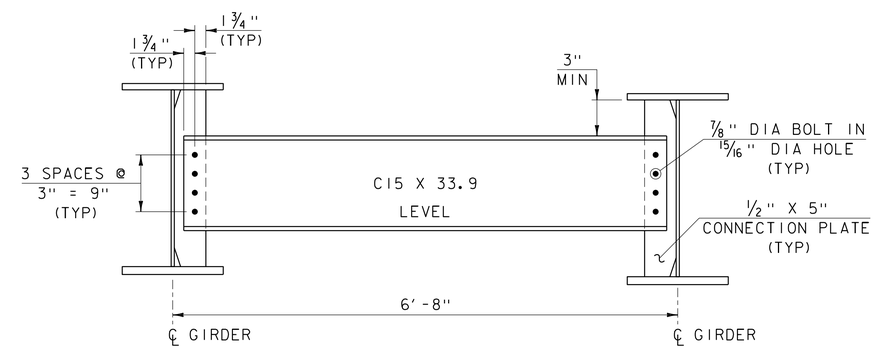

INTERMEDIATE DIAPHRAGM

SCALE: 1" = 1'-0"

PROJECT NAME: DERBY	
PROJECT NUMBER: IM 091-3(49)	
FILE NAME: s12a274sup.dgn	PLOT DATE: 02-JUN-2017
PROJECT LEADER: C. CARLSON	DRAWN BY: G. ROY
DESIGNED BY: D. PETERSON	CHECKED BY: J. LACY
STRUCTURAL STEEL DETAILS	SHEET 20 OF 73

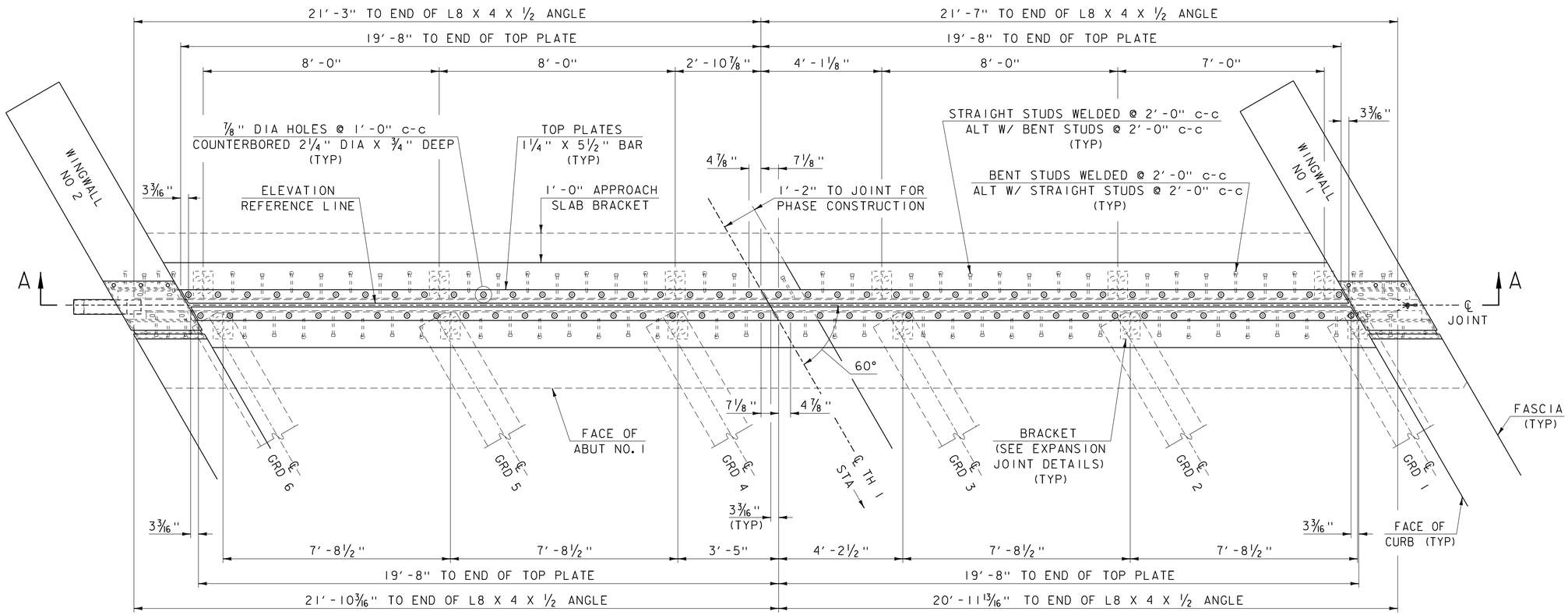

BRIDGE EXPANSION JOINT PLAN AT ABUTMENT NO. 1

SCALE: 1/2" = 1'-0"

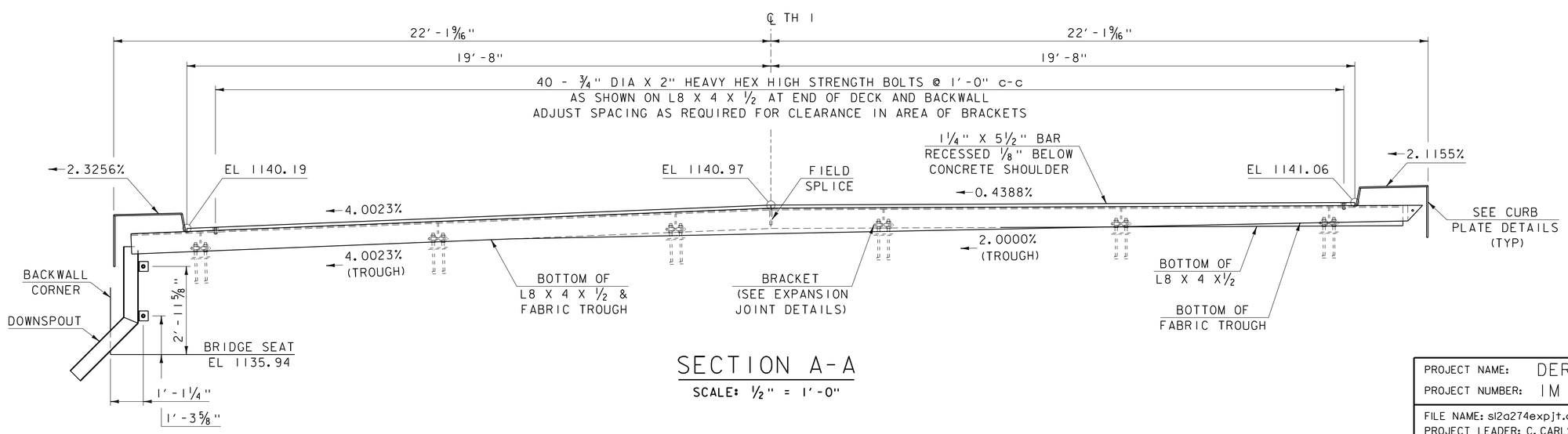

SECTION A-A

SCALE: 1/2" = 1'-0"

PROJECT NAME: DERBY	
PROJECT NUMBER: IM 091-3(49)	
FILE NAME: s12a274expjt.dgn	PLOT DATE: 02-JUN-2017
PROJECT LEADER: C. CARLSON	DRAWN BY: G. ROY
DESIGNED BY: D. PETERSON	CHECKED BY: J. LACY
EXPANSION JOINT NO. 1 PLAN AND SECTION	SHEET 21 OF 73

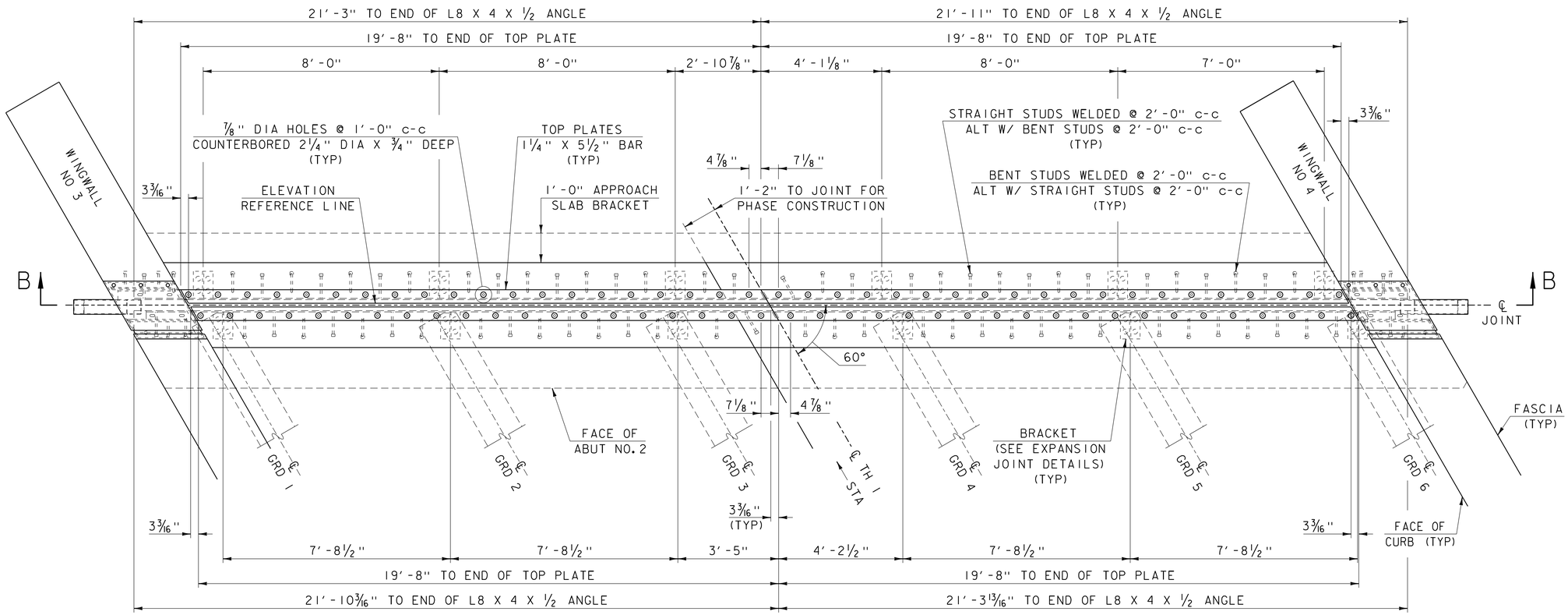

BRIDGE EXPANSION JOINT PLAN AT ABUTMENT NO. 2

SCALE: 1/2" = 1'-0"

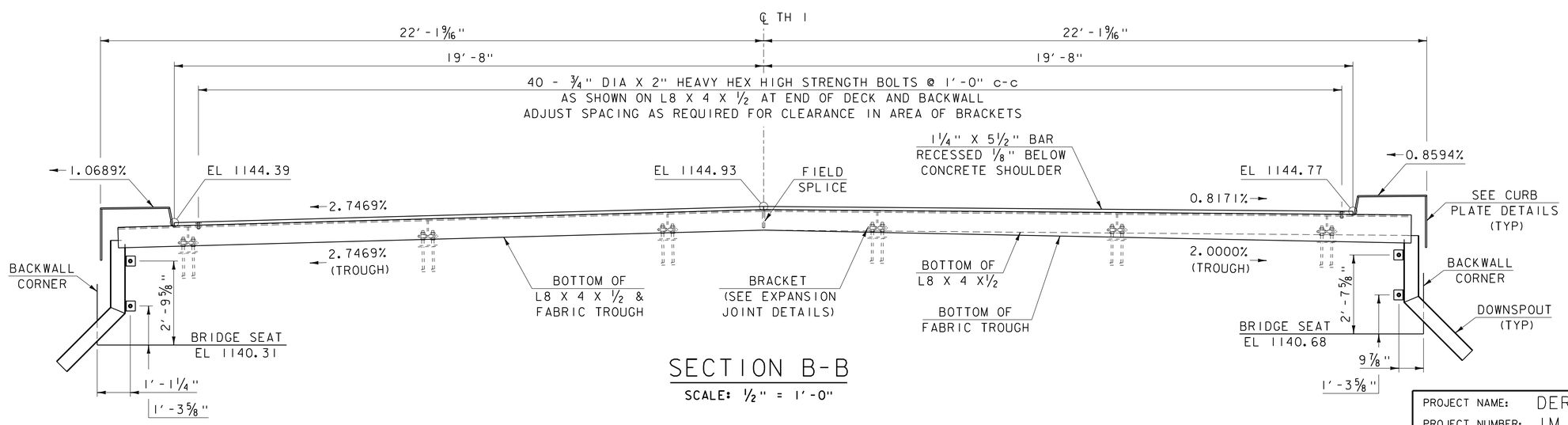

SECTION B-B

SCALE: 1/2" = 1'-0"

PROJECT NAME: DERBY	
PROJECT NUMBER: IM 091-3(49)	
FILE NAME: s12a274expjt.dgn	PLOT DATE: 02-JUN-2017
PROJECT LEADER: C. CARLSON	DRAWN BY: G. ROY
DESIGNED BY: D. PETERSON	CHECKED BY: J. LACY
EXPANSION JOINT NO. 2 PLAN AND SECTION	SHEET 22 OF 73

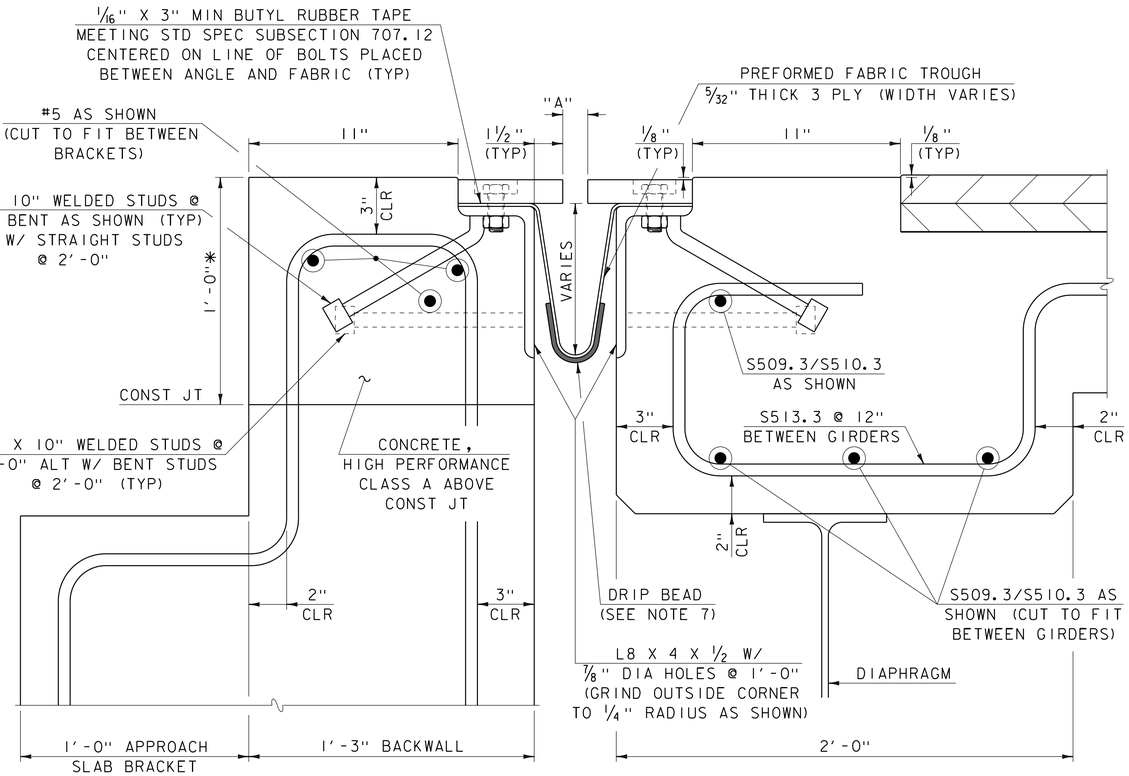

TYPICAL SECTION BETWEEN GIRDERS

(NORMAL TO ℄ BEARING)

* THESE DIMENSIONS ARE THEORETICAL AND MAY CHANGE DEPENDING UPON THE OUTCOME OF THE BEAM PROFILES.

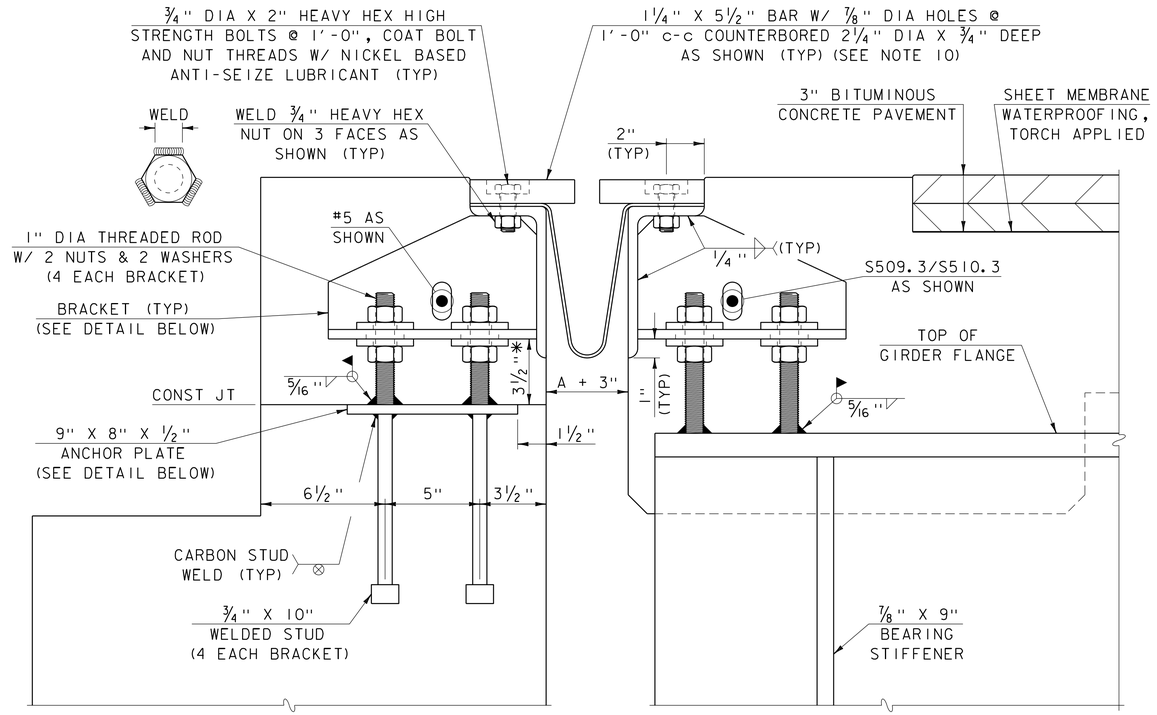

TYPICAL SECTION AT GIRDERS

(NORMAL TO ℄ BEARING)

1. DETAILS ON THIS SHEET WILL BE PAID UNDER ITEM 516.11 "BRIDGE EXPANSION JOINT, VERMONT", UNLESS OTHERWISE SPECIFIED.
2. ALL STEEL COMPONENTS SHALL BE GALVANIZED OR METALIZED AND MEET THE REQUIREMENTS OF STD SPEC SUBSECTION 516.02. PRIOR TO GALVANIZING OR METALIZING, ALL CORNERS AND EDGES OF STEEL PLATES, SHAPES, ETC. SHALL BE GROUND TO A 1/16" RADIUS.
3. THE L8 X 4 X 1/2 ANGLES AND 1 1/4" X 5 1/2" BARS EACH SIDE OF THE JOINT SHALL BE PROVIDED IN TWO LENGTHS AS SHOWN IN THE PLANS.
4. THREADED RODS SHALL MEET THE REQUIREMENTS OF STD SPEC SUBSECTION 714.04.
5. THE ANCHOR PLATE AND ATTACHED WELDED STUDS MAY BE SUPPLIED WITHOUT GALVANIZING OR METALIZING.
6. FABRIC TROUGH SHALL BE CONTINUOUS FOR THE FULL LENGTH OF THE JOINT.
7. A DRIP BEAD OF 1/4" X 7" STRIP OF PREFORMED MATERIAL SHALL BE CEMENTED TO THE BOTTOM OF THE FABRIC TROUGH USING AN ADHESIVE APPROVED BY THE MANUFACTURER. THE DRIP BEAD SHALL BE APPLIED 1" FROM THE DOWNSPOUT END OF THE TROUGH.
8. PROJECTING THREADS OF THE 3/4" DIA BOLTS SHALL BE GREASED BY THE CONTRACTOR PRIOR TO PLACING ADJACENT CONCRETE. THIS WILL FACILITATE FUTURE REMOVAL OF BOLTS.
9. THE FINAL EXPOSED FINISH OF THE EXPANSION JOINT SHALL BE COVERED DURING PLACEMENT OF BRIDGE DECK CONCRETE.
10. FILL COUNTERBORED HOLES WITH HOT POURED JOINT SEALER, MEETING STD SPEC SUBSECTION 707.04, AFTER BOLT INSTALLATION. PAYMENT SHALL BE INCLUDED IN THE UNIT PRICE BID FOR ITEM 516.11 "BRIDGE EXPANSION JOINT, VERMONT".
11. FABRIC TROUGH SHALL BE THOROUGHLY CLEANED AND FLUSHED AFTER PAVING OPERATIONS.
12. PAYMENT FOR PVC WATERSTOP SHALL BE INCLUDED IN THE UNIT PRICE BID FOR ITEM 501.34 "CONCRETE, HIGH PERFORMANCE CLASS B".
13. THE EXPANSION JOINT, INCLUDING THE FABRIC TROUGH, SHALL BE SHOP ASSEMBLED AND SHIPPED AS ONE UNIT.
14. TEMPORARY SHIPPING ATTACHMENTS SHALL BE ATTACHED BY BOLTING; WELDING WILL NOT BE PERMITTED.

TEMP	"A" DISTANCE	
	ABUT NO. 1	ABUT NO. 2
0°F	2 1/16"	1 7/8"
15°F	1 7/8"	1 3/4"
30°F	1 11/16"	1 5/8"
45°F	1 1/2"	1 1/2"
60°F	1 5/16"	1 3/8"
75°F	1 1/8"	1 1/4"
90°F	15/16"	1 1/8"
105°F	3/4"	1"

"A" IS THE SETTING BEFORE DEAD LOADS ARE IN PLACE.

ALL PLATES 1/2"

SCALE: 3" = 1'-0"

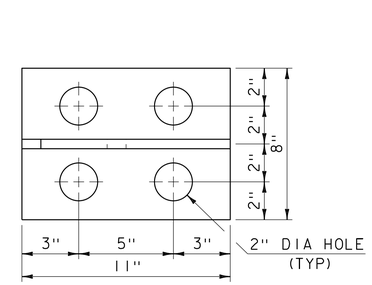

BRACKET PLAN

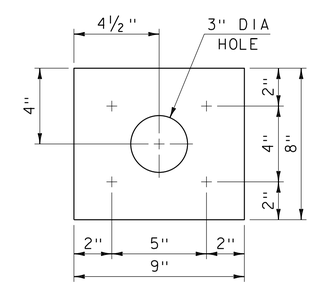

ANCHOR PLATE PLAN

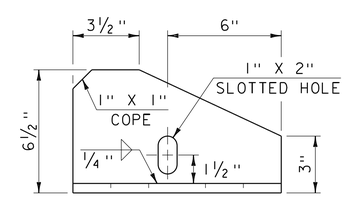

BRACKET ELEVATION

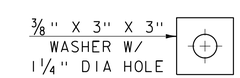

BRACKET WASHER

PROJECT NAME: DERBY	
PROJECT NUMBER: IM 091-3(49)	
FILE NAME: sl2a274expjt.dgn	PLOT DATE: 02-JUN-2017
PROJECT LEADER: C. CARLSON	DRAWN BY: G. ROY
DESIGNED BY: D. PETERSON	CHECKED BY: J. LACY
EXPANSION JOINT DETAILS	SHEET 23 OF 73

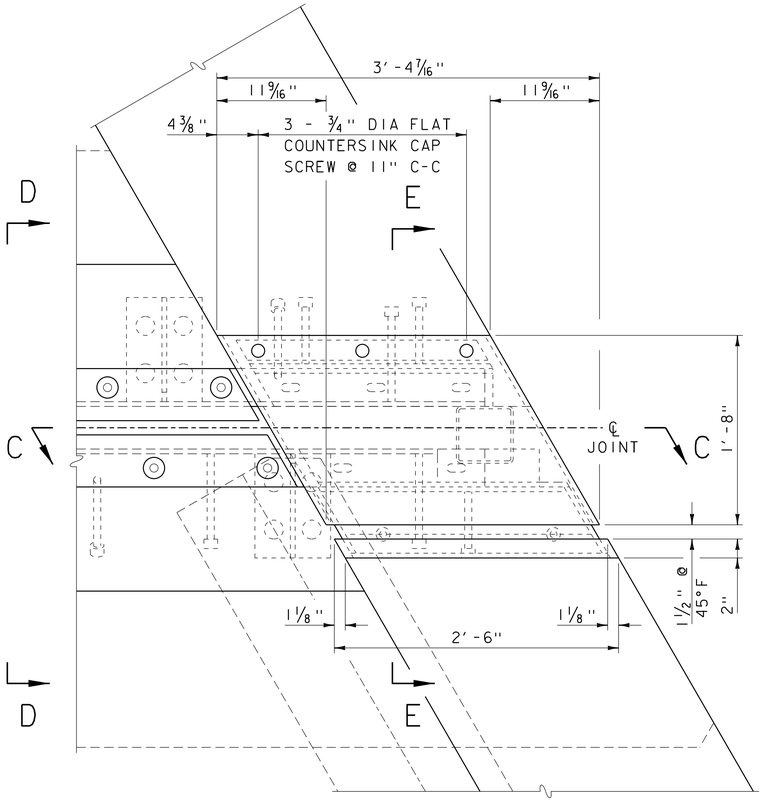

CURB PLATES PLAN

SCALE: 1 1/2" = 1'-0"

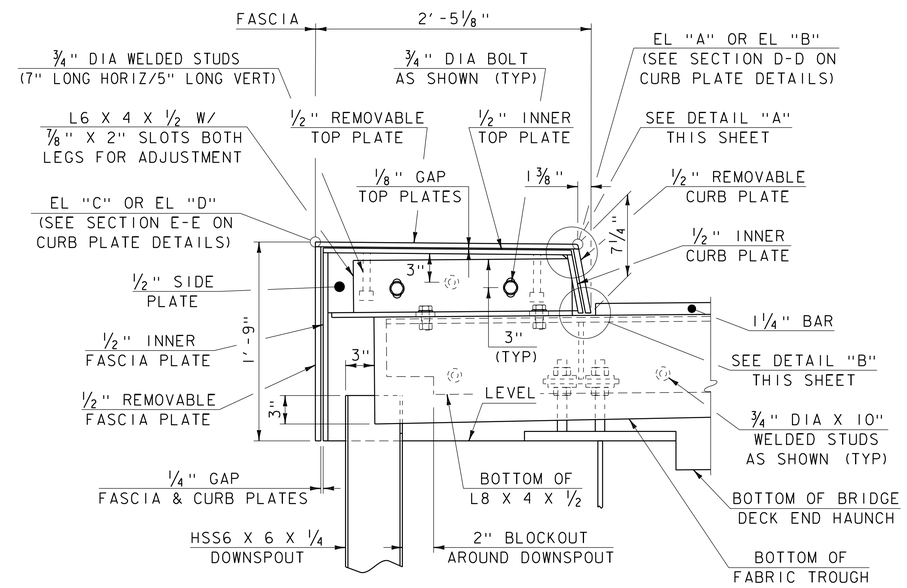

SECTION C-C

SCALE: 1 1/2" = 1'-0"

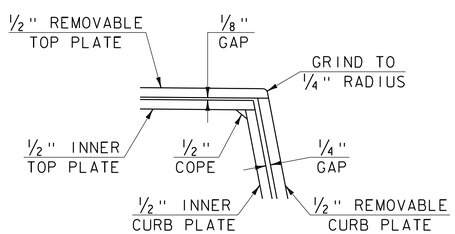

DETAIL "A"

SCALE: 3" = 1'-0"

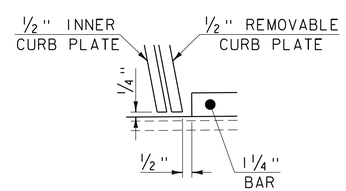

DETAIL "B"

SCALE: 3" = 1'-0"

NOTE:

SEE CURB PLATE DETAILS FOR SECTIONS D-D AND E-E.

PROJECT NAME: DERBY	
PROJECT NUMBER: IM 091-3(49)	
FILE NAME: s12a274expjt.dgn	PLOT DATE: 02-JUN-2017
PROJECT LEADER: C. CARLSON	DRAWN BY: G. ROY
DESIGNED BY: D. PETERSON	CHECKED BY: J. LACY
CURB PLATES PLAN AND SECTION	SHEET 24 OF 73

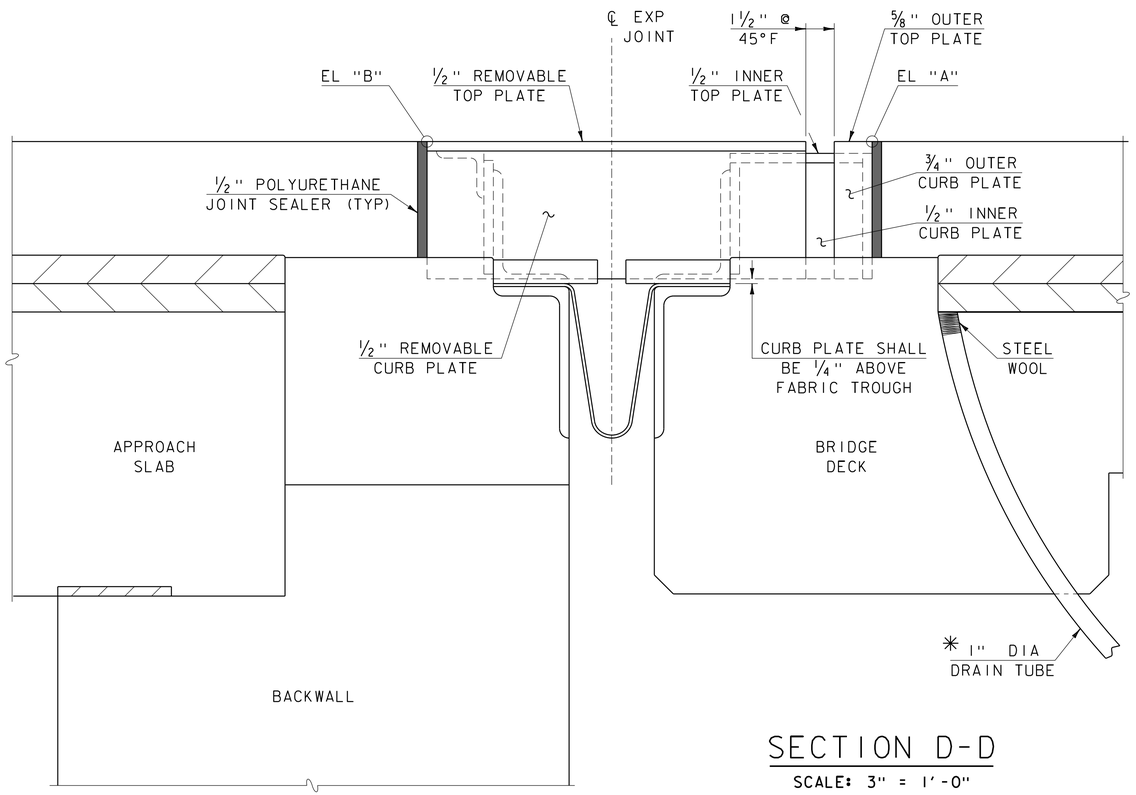

SECTION D-D

SCALE: 3" = 1'-0"

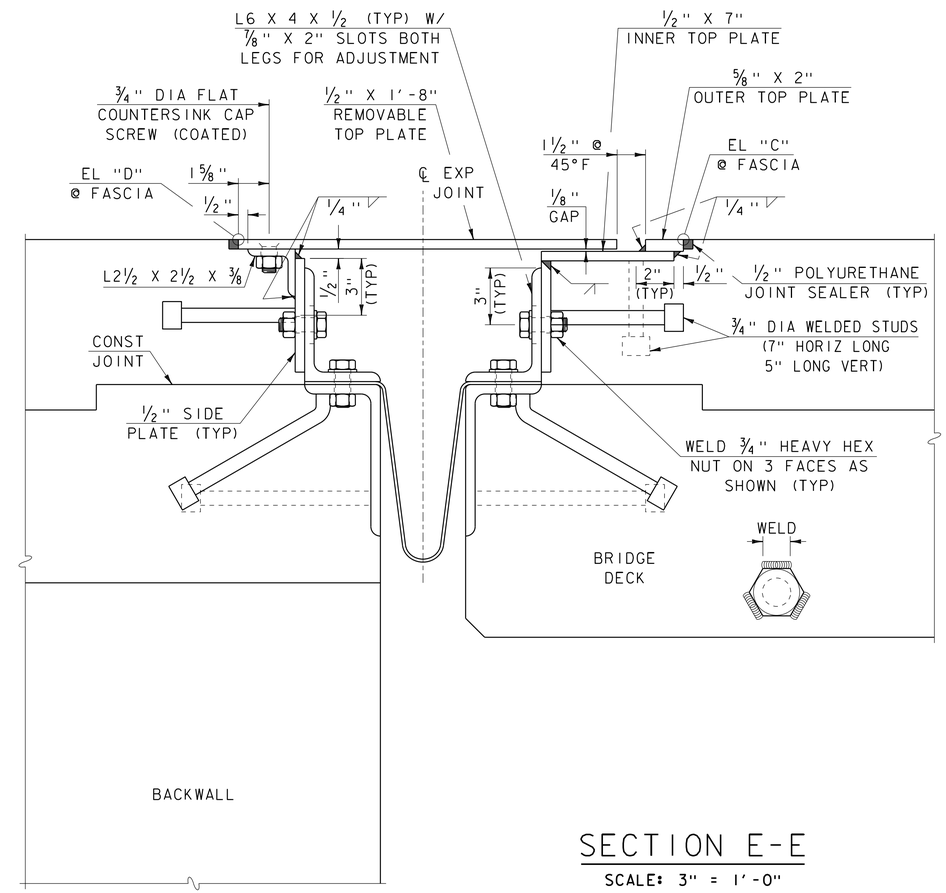

SECTION E-E

SCALE: 3" = 1'-0"

* 1" DIAMETER PLASTIC DRAIN TUBE (PER STD SPEC 740.01) SHALL BE INSTALLED AT THE FACE OF CURB ON BOTH SIDES. THE UPPER END IS TO BE PLUGGED WITH STEEL WOOL AND THE LOWER END IS TO EXTEND BELOW THE BOTTOM OF THE ADJACENT GIRDER. THE DRAIN TUBES SHALL BE FASTENED TO THE GIRDERS USING A METHOD APPROVED BY THE ENGINEER. PAYMENT FOR DRAIN TUBES AND THEIR INSTALLATION SHALL BE INCIDENTAL TO ITEM 501.33, "CONCRETE, HIGH PERFORMANCE CLASS A".

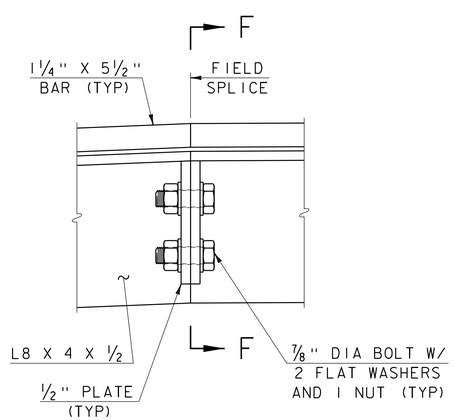

FIELD SPLICE DETAIL

SCALE: 3" = 1'-0"

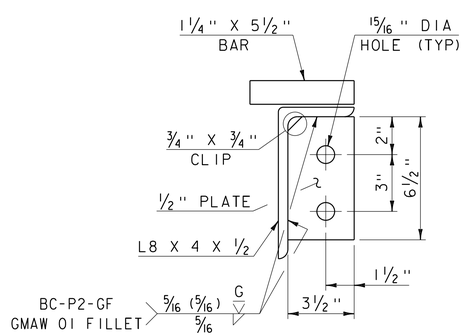

SECTION F-F

SCALE: 3" = 1'-0"

POINT	ELEVATION			
	WINGWALL 1	WINGWALL 2	WINGWALL 3	WINGWALL 4
A	1141.64	1140.77	1144.94	1145.31
B	1141.55	1140.66	1144.89	1145.27
C	1141.69	1140.71	1144.91	1145.33
D	1141.60	1140.61	1144.86	1145.29

ELEVATIONS ARE GIVEN WHEN EXPANSION JOINT IS AT 45°F. CONTRACTOR WILL HAVE TO ADJUST ELEVATIONS FOR OTHER TEMPERATURES.

PROJECT NAME: DERBY
PROJECT NUMBER: IM 091-3(49)

FILE NAME: s12a274expjt.dgn
PROJECT LEADER: C. CARLSON
DESIGNED BY: D. PETERSON
CURB PLATE AND FIELD SPLICE DETAILS

PLOT DATE: 02-JUN-2017
DRAWN BY: G. ROY
CHECKED BY: J. LACY
SHEET 25 OF 73

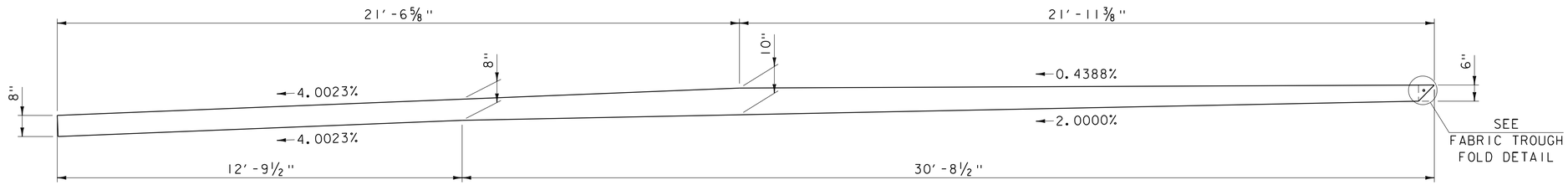

EXPANSION JOINT NO. 1 FABRIC TROUGH ELEVATION

SCALE: 1/2" = 1'-0"

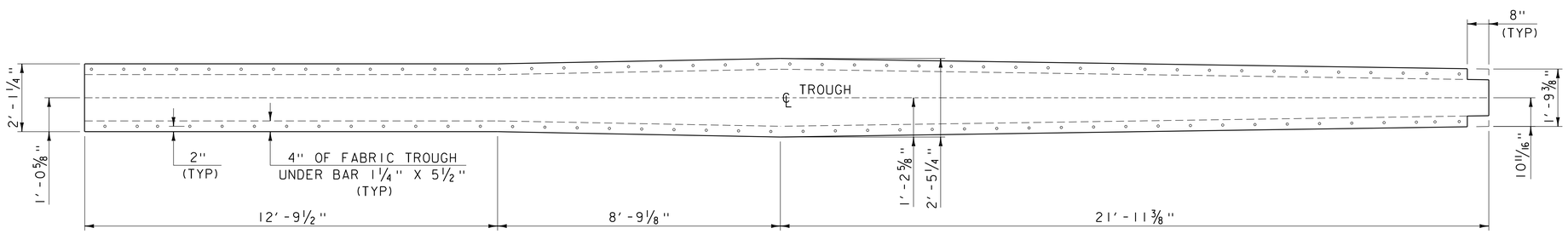

EXPANSION JOINT NO. 1 FABRIC TROUGH ELEVATION

SCALE: 1/2" = 1'-0"

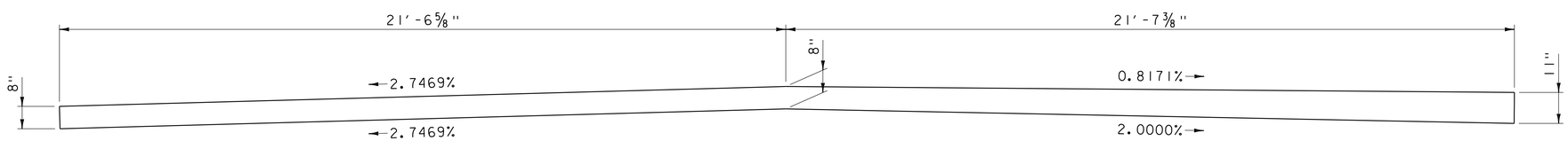

EXPANSION JOINT NO. 2 FABRIC TROUGH ELEVATION

SCALE: 1/2" = 1'-0"

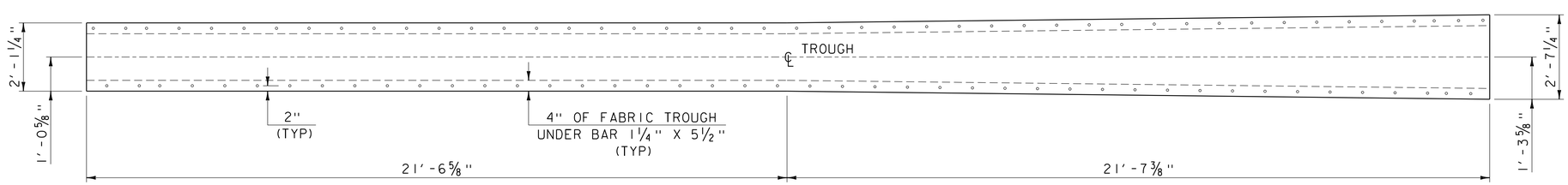

EXPANSION JOINT NO. 2 FABRIC TROUGH PLAN

SCALE: 1/2" = 1'-0"

PROJECT NAME: DERBY	
PROJECT NUMBER: IM 091-3(49)	
FILE NAME: sl2a274expjt.dgn	PLOT DATE: 02-JUN-2017
PROJECT LEADER: C. CARLSON	DRAWN BY: G. ROY
DESIGNED BY: D. PETERSON	CHECKED BY: J. LACY
FABRIC TROUGH DETAILS	SHEET 26 OF 73

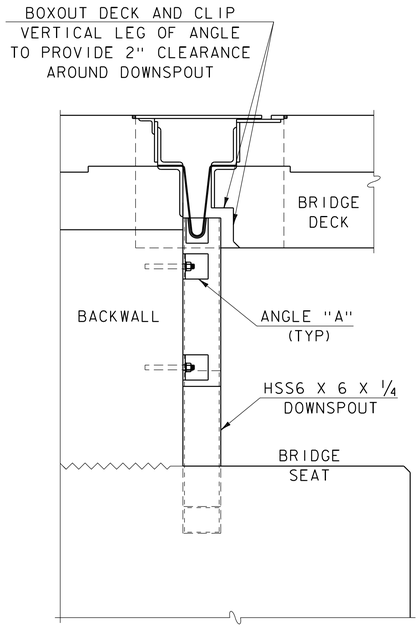

DOWNSPOUT ELEVATION

SCALE: 1" = 1'-0"

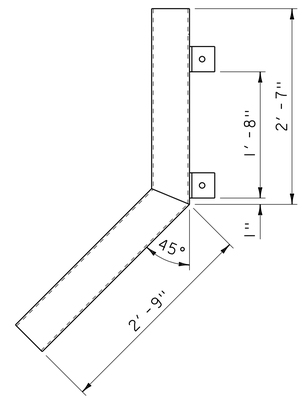

WINGWALL NO. 2

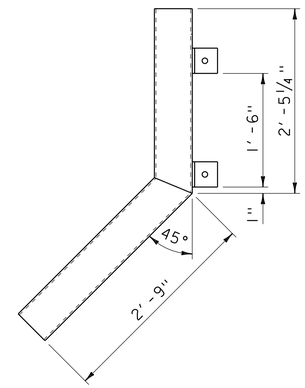

WINGWALL NO. 3

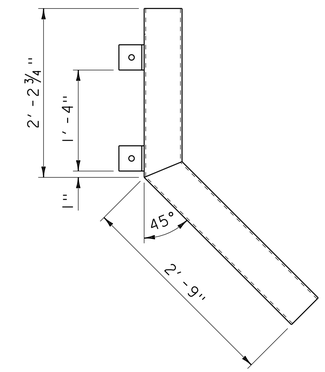

WINGWALL NO. 4

DOWNSPOUT DETAILS

SCALE: 1" = 1'-0"

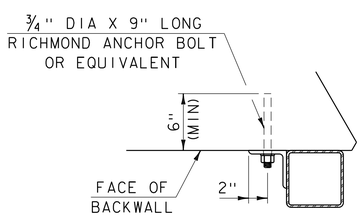

DETAIL FOR ATTACHING DOWNSPOUT TO BACKWALL PLAN VIEW

SCALE: 1 1/2" = 1'-0"

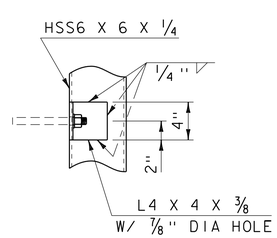

ELEVATION OF ANGLE "A"

SCALE: 1 1/2" = 1'-0"

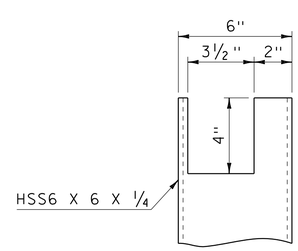

DOWNSPOUT CUTOUT DETAIL

SCALE: 3" = 1'-0"

NOTES:

1. HOLLOW STRUCTURAL STEEL TUBING SHALL CONFORM TO SUBSECTION 506.02.
2. ALL PLATES, BARS, AND ANGLES SHALL CONFORM TO SUBSECTION 714.
3. DOWNSPOUTS SHALL BE GALVANIZED IN ACCORDANCE WITH SUBSECTION 726.08.
4. ALL BOLTS AND RELATED HARDWARE SHALL BE ASTM A307 AND SHALL BE GALVANIZED IN ACCORDANCE WITH AASHTO M 232M/M 232.
5. AREAS WHERE THE GALVANIZING HAS BEEN REMOVED FROM THE DOWNSPOUTS EITHER BY CUTTING, BURNING, WELDING, PLACING, OR ANY OTHER MEANS SHALL BE REPAIRED IN CONFORMANCE WITH SUBSECTION 726.08.
6. ALL MATERIALS AND INSTALLATION COSTS FOR THE DOWNSPOUTS, INCLUDING STEEL TUBING, RELATED HARDWARE, AND ANCHOR BOLTS SHALL BE PAID FOR UNDER ITEM 506.55 "STRUCTURAL STEEL, PLATE GIRDER".

PROJECT NAME: DERBY	
PROJECT NUMBER: IM 091-3(49)	
FILE NAME: s12a274expjt.dgn	PLOT DATE: 02-JUN-2017
PROJECT LEADER: C. CARLSON	DRAWN BY: G. ROY
DESIGNED BY: D. PETERSON	CHECKED BY: J. LACY
DOWNSPOUT DETAILS	SHEET 27 OF 73

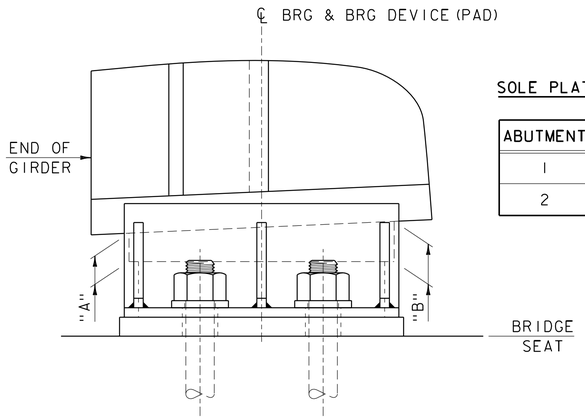

SIDE VIEW

SCALE: 3" = 1'-0"

SOLE PLATE THICKNESS

ABUTMENT	"A"	"B"
1	1 1/2"	2 1/8"
2	1 3/4"	1 1/2"

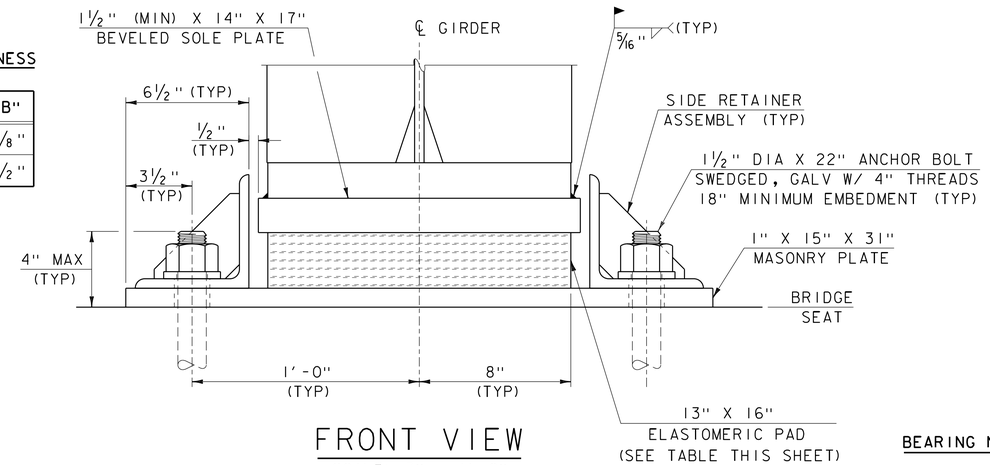

FRONT VIEW

SCALE: 3" = 1'-0"

ELASTOMERIC PAD TABLE

ELASTOMERIC PAD LAYER	ABUT 1	ABUT 2
1/8" EXTERIOR LAYERS OF ELASTOMER	2	2
3/8" INTERIOR LAYERS OF ELASTOMER	9	6
1/16" STEEL REINFORCING PLATES	10	7
TOTAL THICKNESS	4 1/4"	2 15/16"

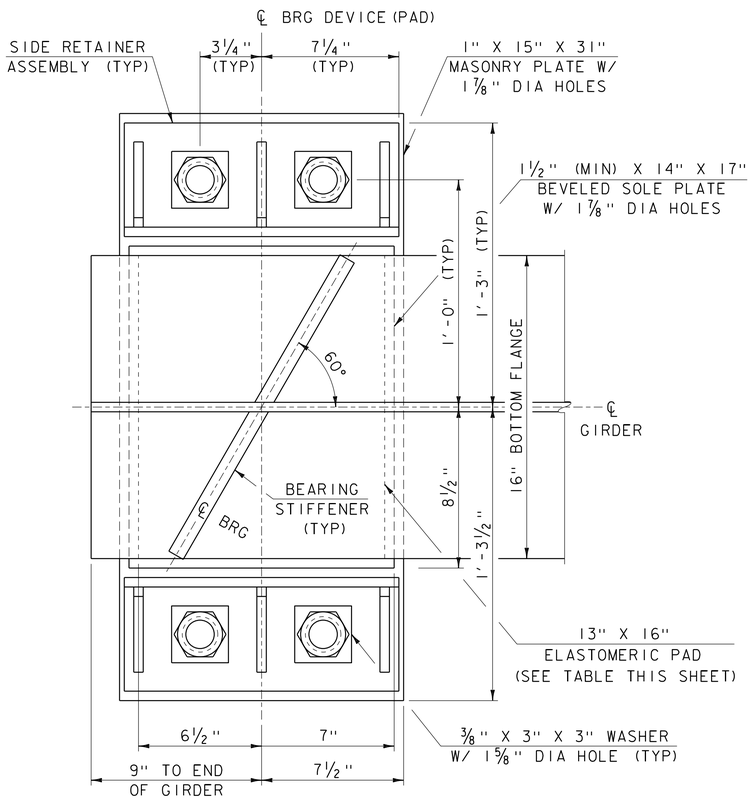

PLAN VIEW

SCALE: 3" = 1'-0"

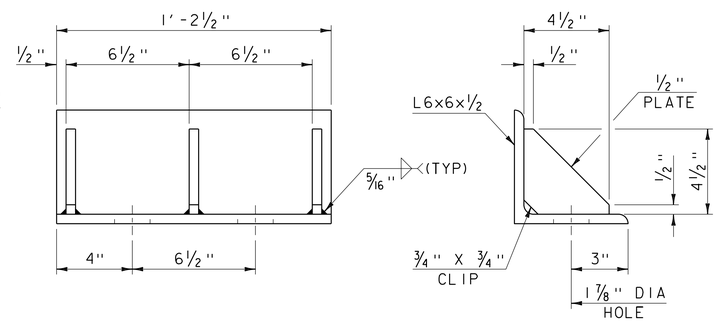

SIDE RETAINER ASSEMBLY

SCALE: 3" = 1'-0"

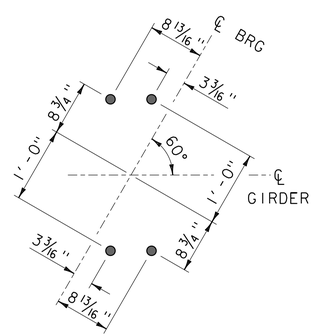

ABUTMENT ANCHOR BOLT LAYOUT

SCALE: 1" = 1'-0"

BEARING NOTES:

1. BEARINGS WILL BE PAID FOR UNDER ITEM 531.17 "BEARING DEVICE ASSEMBLY, STEEL REINFORCED ELASTOMERIC PAD" AND SHALL CONFORM TO APPLICABLE SUBSECTIONS OF SECTION 531 AND 731.

2. FABRICATION DRAWINGS, INCLUDING ASSOCIATED WELDING PROCEDURES, SHALL BE SUBMITTED CONFORMING TO SUBSECTION 531.03.

3. DESIGN CRITERIA:

	ABUT 1	PIER 1	PIER 2	PIER 3	ABUT 2
A. DEAD LOAD ROTATION (RADIANS):	0.044	0.021	0.007	0.009	0.019
B. DEAD LOAD (UNFACTORED) (KIPS):	59	152	66	92	16
C. LIVE LOAD WITHOUT IMPACT (KIPS):	103	169	123	124	72
D. ELASTOMER SHEAR MODULUS (PSI):	95	95	95	95	95

   E. HORIZONTAL CAPACITY SHALL BE A MINIMUM OF 20% VERTICAL LOAD IN ANY UNRESTRAINED DIRECTION.

4. ALL STEEL IN BEARINGS DEVICES SHALL BE AASHTO M 270M/M 270 GRADE 36, UNLESS OTHERWISE NOTED.

5. ALL REINFORCEMENT BETWEEN LAYERS OF ELASTOMER SHALL BE STEEL MEETING THE REQUIREMENTS OF SUBSECTION 714.02. ALL INTERNAL STEEL SHEETS SHALL BE SAND BLASTED AND FREE OF COATINGS, RUST AND MILL SCALE. THE SHEETS SHALL BE FREE OF SHARP EDGES AND BURRS.

6. STEEL REINFORCED ELASTOMERIC BEARINGS SHALL HAVE A MINIMUM 1/8" EDGE SEAL OF ELASTOMER INTEGRAL WITH BEARING OVER ALL INTERNAL SHEETS.

7. ALL BEARING DEVICES SHALL BE GALVANIZED OR METALIZED AS PER SUBSECTIONS 506.14 AND 531.04(b). IF THE BEARING DEVICES ARE METALIZED, THEY SHALL BE SEALED WITH AN APPROVED SEALER AS SPECIFIED IN SUBSECTION 531.04(b). ALL AREAS OF GALVANIZING OR METALIZING DAMAGED BY FIELD WELDING OR HANDLING SHALL BE REPAIRED IN CONFORMANCE WITH SUBSECTION 726.08.

8. THE CONCRETE SURFACE UNDER THE BEARING DEVICES SHALL BE LEVEL.

9. ANCHOR BOLTS SHALL HAVE A MINIMUM 18 INCHES EMBEDMENT INTO THE CONCRETE AND SHALL CONFORM TO SUBSECTION 714.08. BURR THE THREADS ABOVE THE NUT ON ALL ANCHOR BOLTS TO PREVENT NUT REMOVAL.

10. ELASTOMERIC BEARING PAD SHALL BE VULCANIZED TO THE BEVELED SOLE PLATE.

PROJECT NAME: DERBY
PROJECT NUMBER: IM 091-3(49)

FILE NAME: s12a274bearing.dgn
PROJECT LEADER: C. CARLSON
DESIGNED BY: D. PETERSON
ABUTMENT EXPANSION BEARING DETAILS

PLOT DATE: 02-JUN-2017
DRAWN BY: G. ROY
CHECKED BY: J. LACY
SHEET 28 OF 73

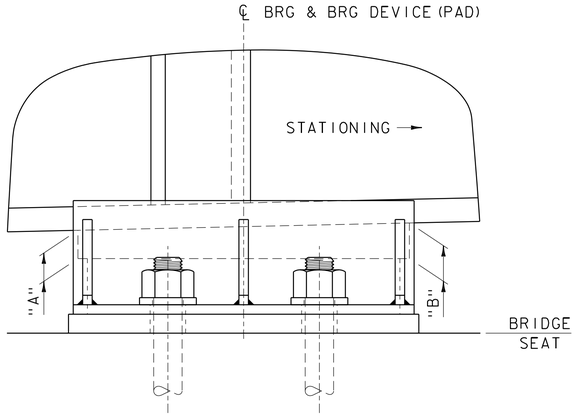

SIDE VIEW

SCALE: 3" = 1'-0"

SOLE PLATE THICKNESS

PIER	"A"	"B"
1	1½"	1⅞"
3	1⅝"	1½"

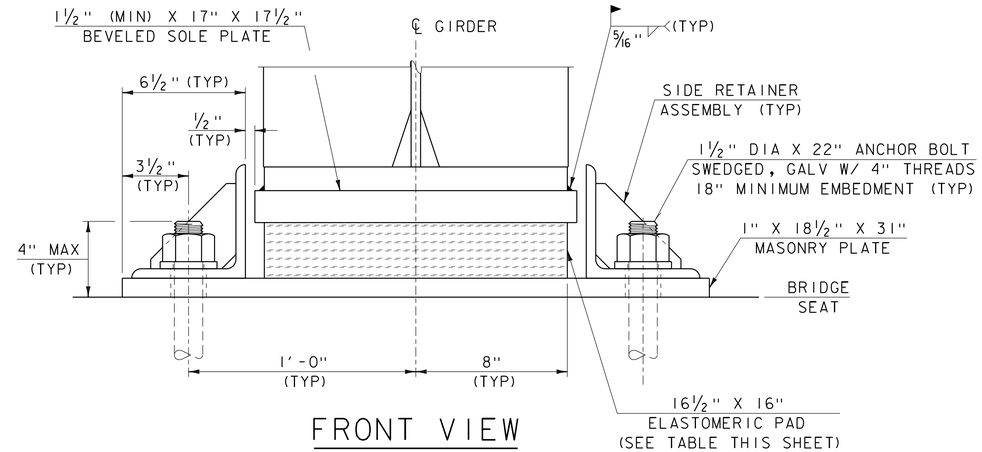

FRONT VIEW

SCALE: 3" = 1'-0"

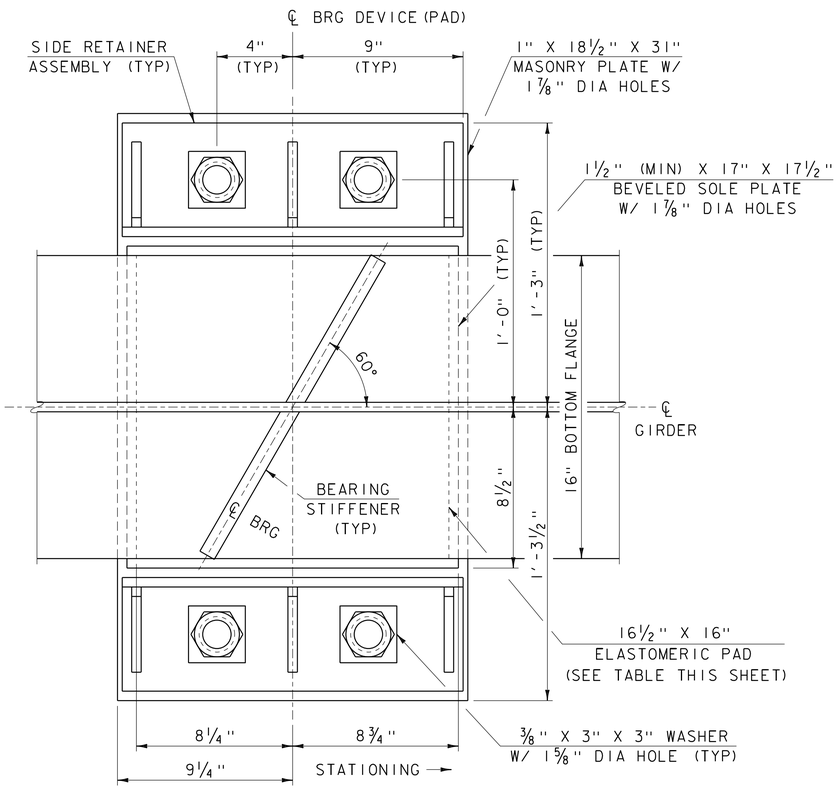

PLAN VIEW

SCALE: 3" = 1'-0"

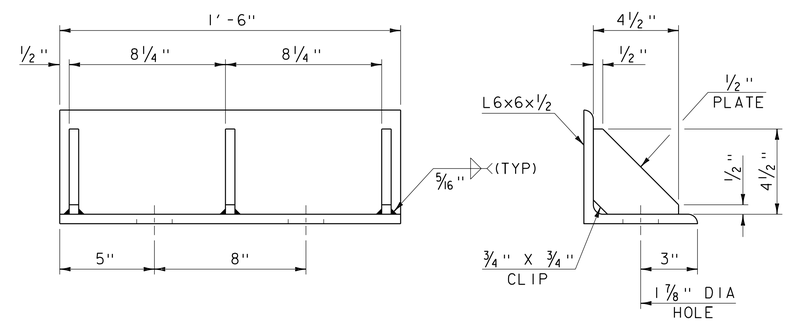

SIDE RETAINER ASSEMBLY

SCALE: 3" = 1'-0"

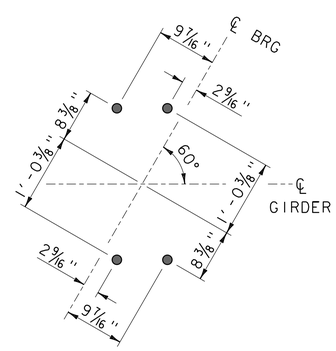

PIER ANCHOR BOLT LAYOUT

SCALE: 1" = 1'-0"

ELASTOMERIC PAD TABLE

ELASTOMERIC PAD LAYER	PIER 1	PIER 3
⅛" EXTERIOR LAYERS OF ELASTOMER	2	2
⅜" INTERIOR LAYERS OF ELASTOMER	8	6
1/16" STEEL REINFORCING PLATES	9	7
TOTAL THICKNESS	3 13/16"	2 15/16"

PROJECT NAME: DERBY
PROJECT NUMBER: IM 091-3(49)

FILE NAME: s12a274bearing.dgn
PROJECT LEADER: C. CARLSON
DESIGNED BY: D. PETERSON
PIER EXPANSION BEARING DETAILS

PLOT DATE: 02-JUN-2017
DRAWN BY: G. ROY
CHECKED BY: J. LACY
SHEET 29 OF 73

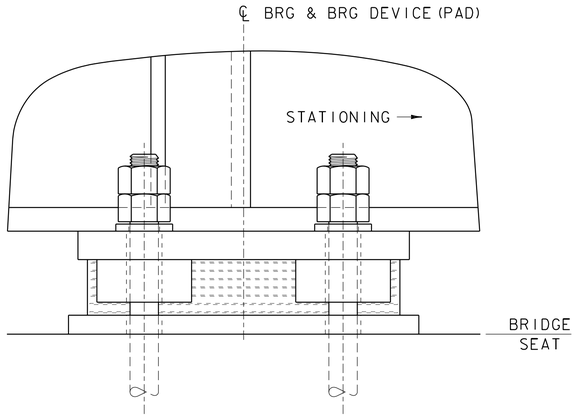

SIDE VIEW

SCALE: 3" = 1'-0"

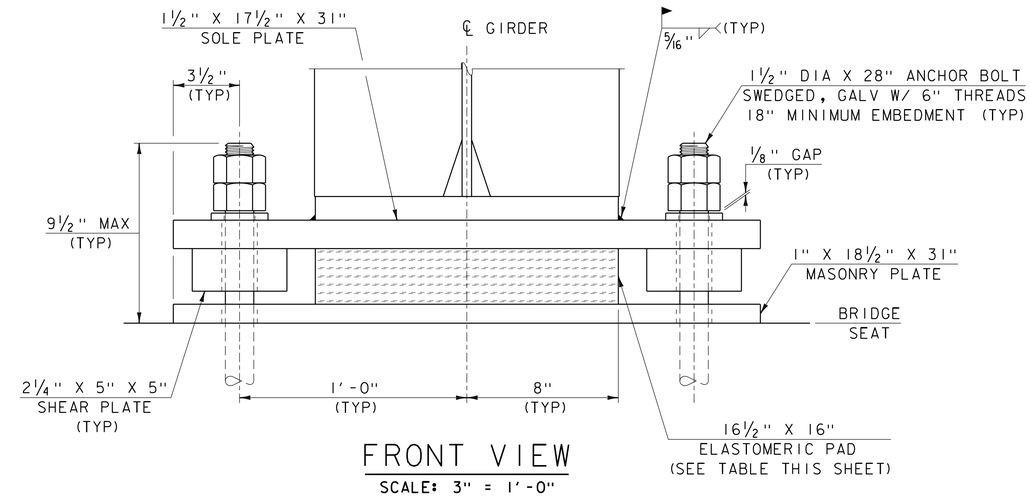

FRONT VIEW

SCALE: 3" = 1'-0"

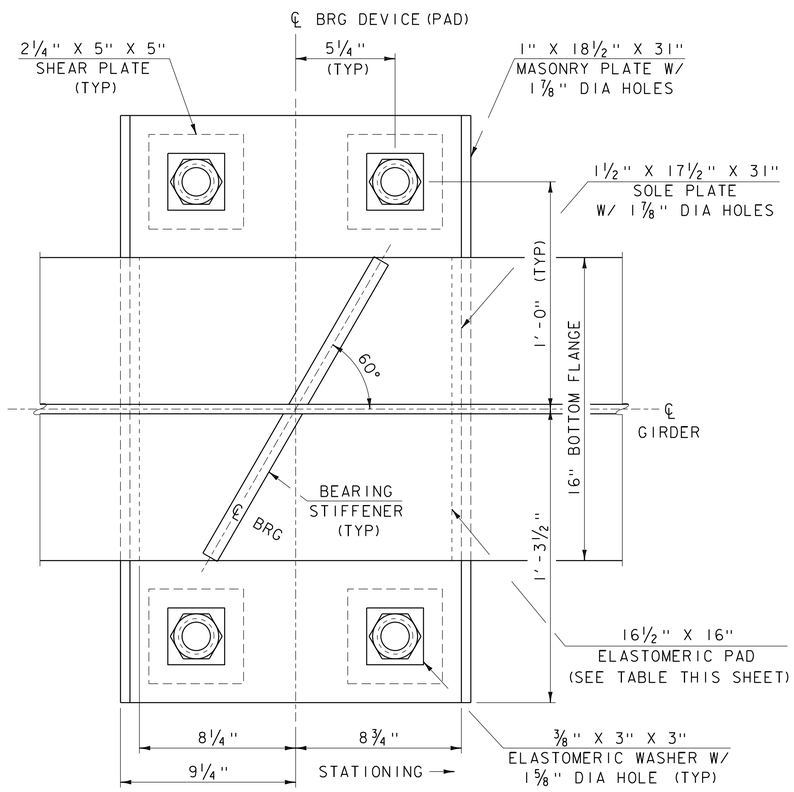

PLAN VIEW

SCALE: 3" = 1'-0"

ELASTOMERIC PAD TABLE

ELASTOMERIC PAD LAYER	PIER 2
⅛" EXTERIOR LAYERS OF ELASTOMER	2
⅜" INTERIOR LAYERS OF ELASTOMER	6
1/16" STEEL REINFORCING PLATES	7
TOTAL THICKNESS	2 15/16"

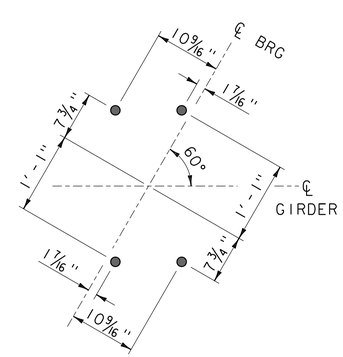

PIER ANCHOR BOLT LAYOUT

SCALE: 1" = 1'-0"

PROJECT NAME: DERBY	
PROJECT NUMBER: IM 091-3(49)	
FILE NAME: s12a274bearing.dgn	PLOT DATE: 02-JUN-2017
PROJECT LEADER: C. CARLSON	DRAWN BY: G. ROY
DESIGNED BY: D. PETERSON	CHECKED BY: J. LACY
PIER FIXED BEARING DETAILS	SHEET 30 OF 73

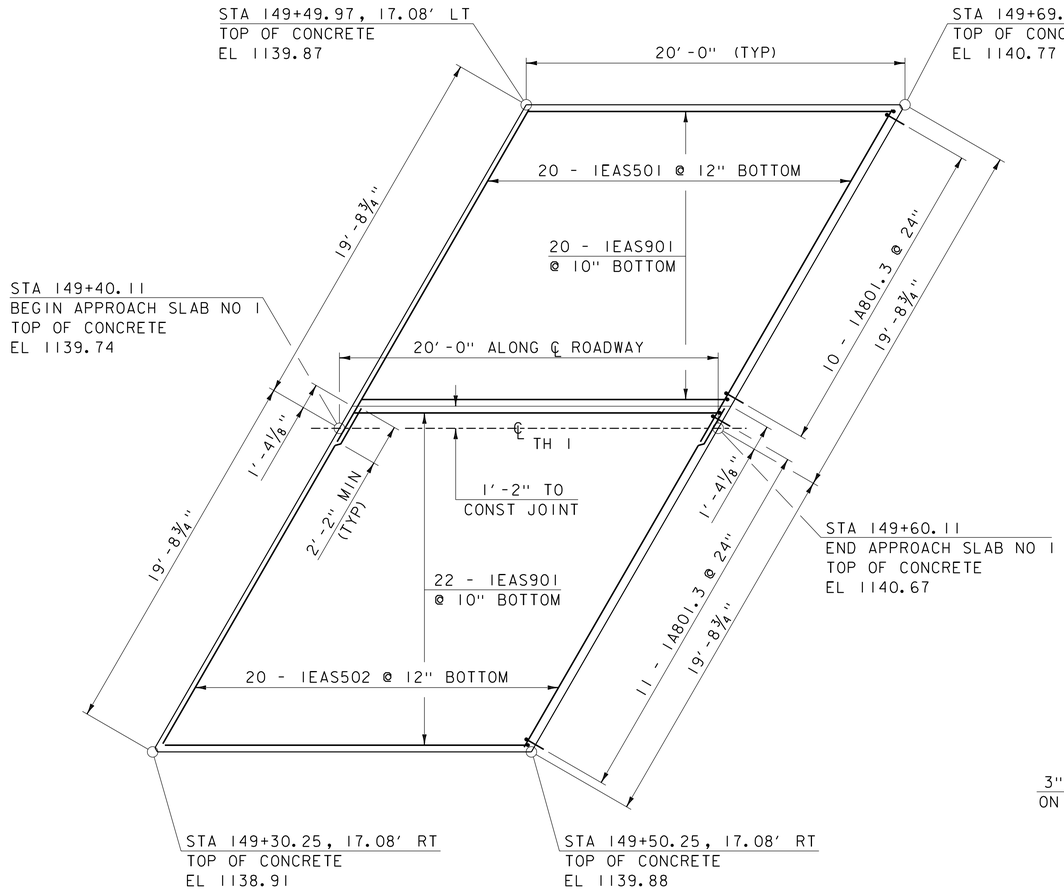

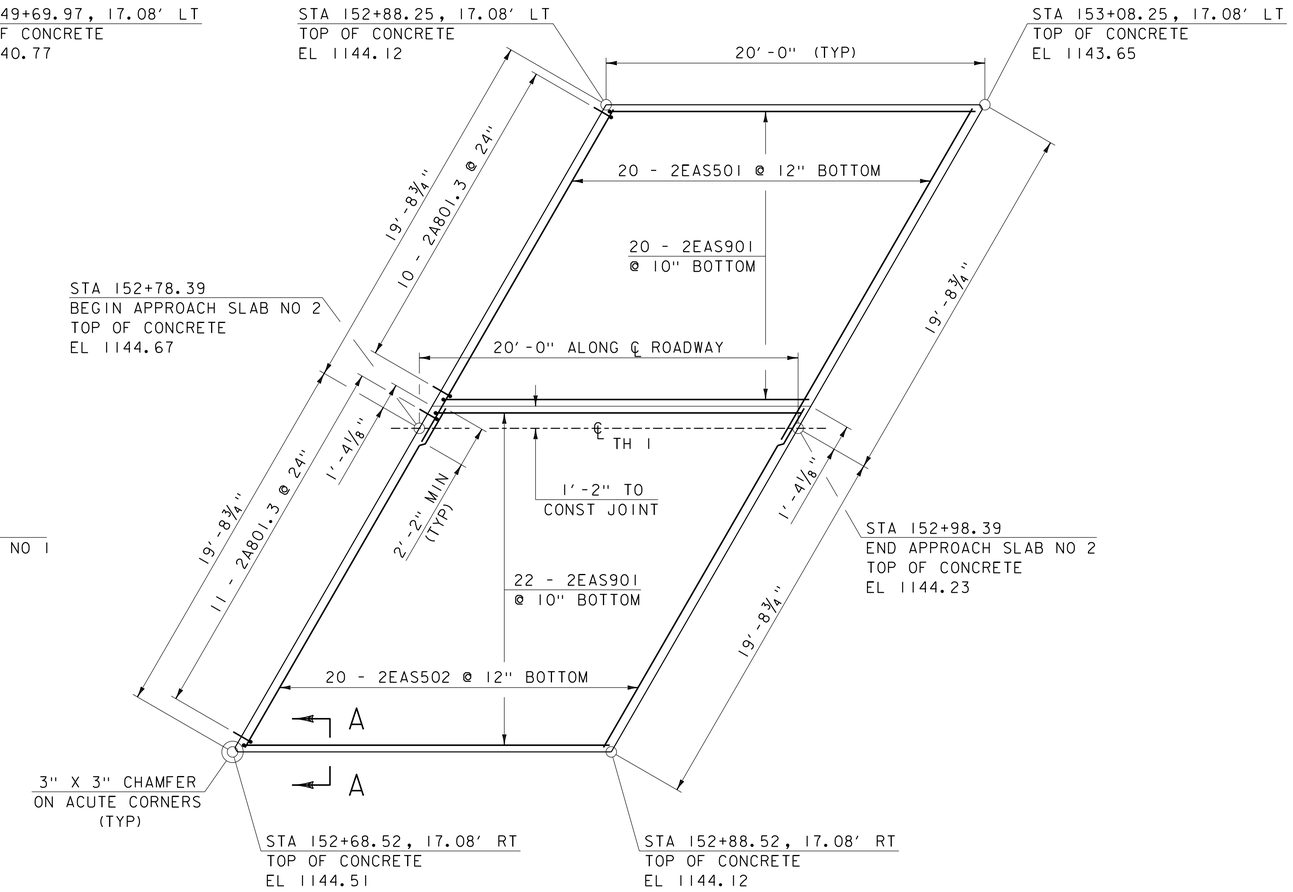

APPROACH SLAB PLAN

SCALE: ¼" = 1'-0"

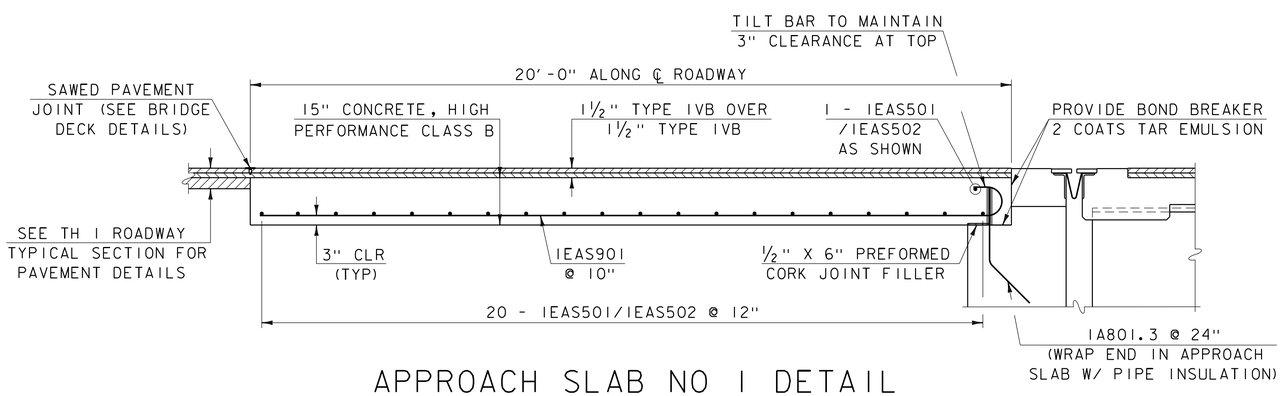

APPROACH SLAB NO 1 DETAIL

SCALE: ½" = 1'-0"
(APPROACH SLAB NO 2 SIMILAR)

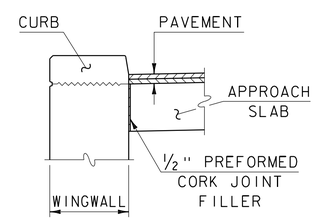

SECTION "A-A"

SCALE: ½" = 1'-0"
(TYP ALONG ALL WINGWALLS)

NOTES:

1. COMPACT THE SUBBASE IN THE AREA UNDER THE APPROACH SLAB TO A SMOOTH SURFACE.
2. PLACE HOOKED ENDS OF BOTTOM STEEL AT ABUTMENT END OF SLAB UNLESS OTHERWISE SHOWN.
3. TAR EMULSION AND PREFORMED CORK JOINT FILLER WILL BE INCLUDED IN THE UNIT PRICE BID FOR ITEM 501.34 "CONCRETE, HIGH PERFORMANCE CLASS B".

PROJECT NAME: DERBY	
PROJECT NUMBER: IM 091-3(49)	
FILE NAME: sl2a274sup.dgn	PLOT DATE: 02-JUN-2017
PROJECT LEADER: C. CARLSON	DRAWN BY: G. ROY
DESIGNED BY: D. PETERSON	CHECKED BY: J. LACY
APPROACH SLAB DETAILS	SHEET 31 OF 73

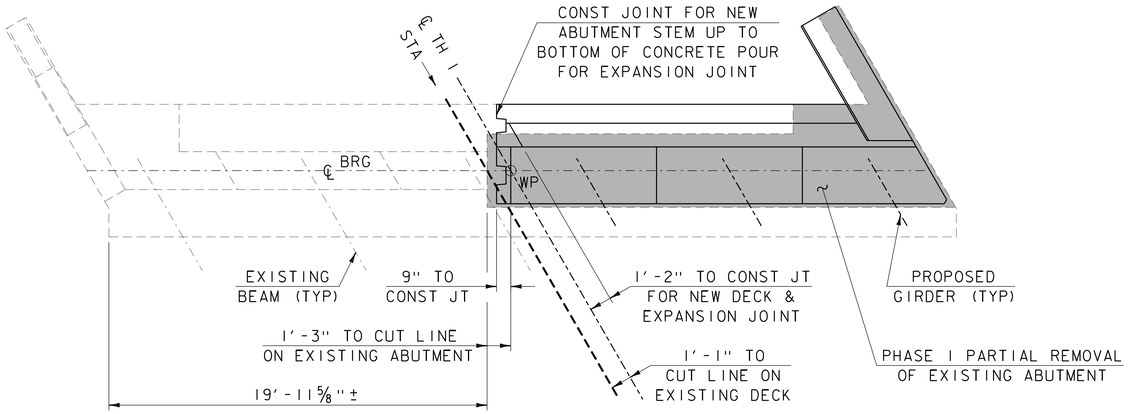

ABUTMENT NO. 1 PLAN PHASE I CONSTRUCTION

SCALE: 1/4" = 1'-0"

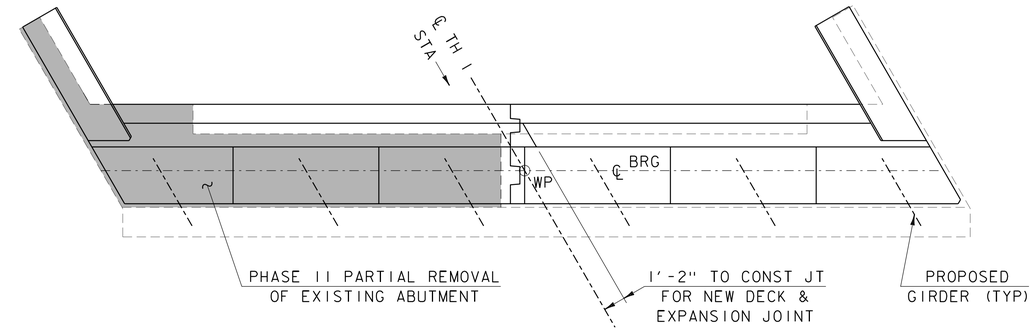

ABUTMENT NO. 1 PLAN PHASE II CONSTRUCTION

SCALE: 1/4" = 1'-0"

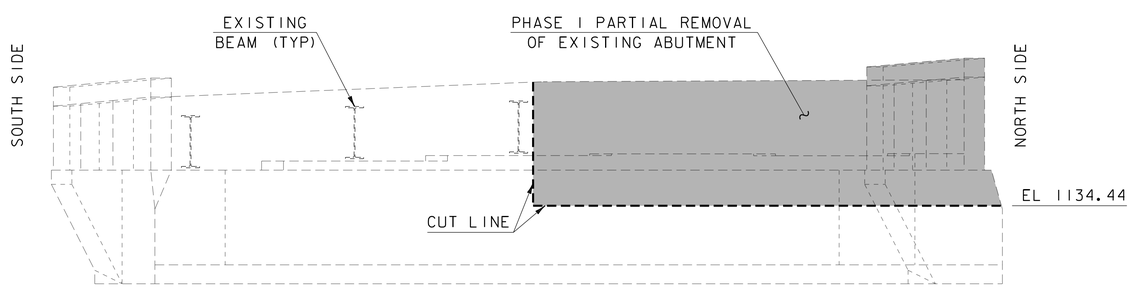

ABUTMENT NO. 1 ELEVATION PHASE I CONSTRUCTION

SCALE: 1/4" = 1'-0"

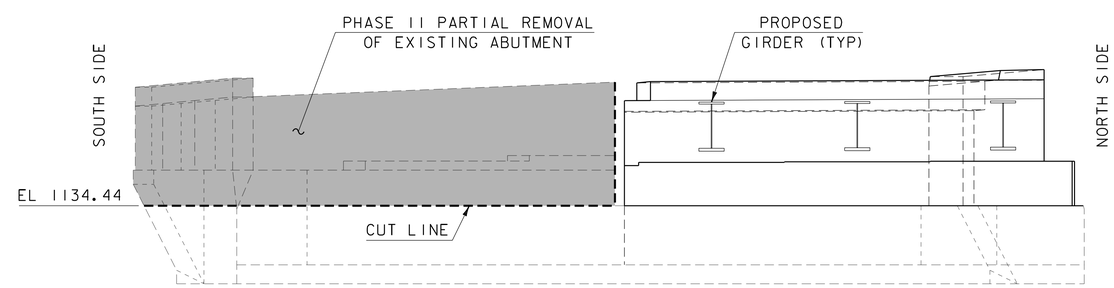

ABUTMENT NO. 1 ELEVATION PHASE II CONSTRUCTION

SCALE: 1/4" = 1'-0"

PROJECT NAME: DERBY	
PROJECT NUMBER: IM 091-3(49)	
FILE NAME: sl2a274sub.dgn	PLOT DATE: 02-JUN-2017
PROJECT LEADER: C. CARLSON	DRAWN BY: G. ROY
DESIGNED BY: D. PETERSON	CHECKED BY: J. LACY
ABUTMENT NO. 1 PHASE CONSTRUCTION DETAILS	SHEET 32 OF 73

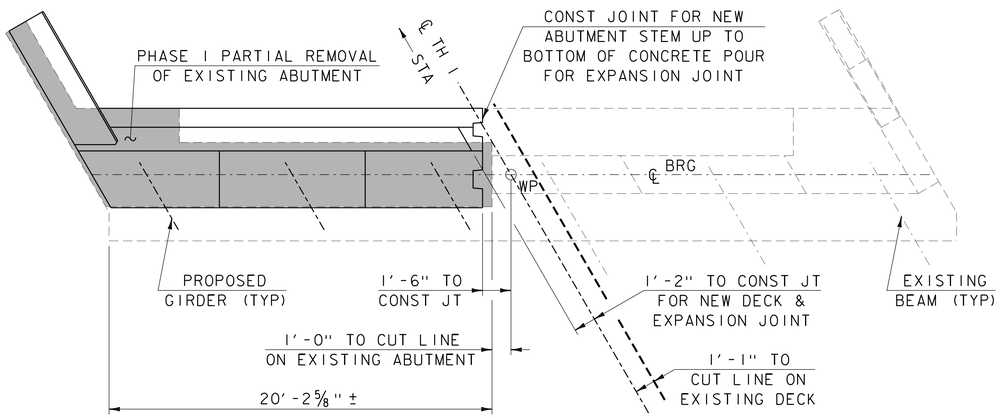

ABUTMENT NO. 2 PLAN PHASE I CONSTRUCTION

SCALE: 1/4" = 1'-0"

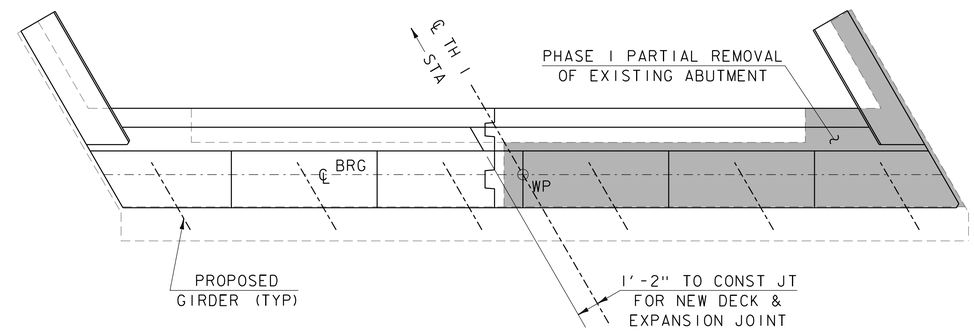

ABUTMENT NO. 2 PLAN PHASE II CONSTRUCTION

SCALE: 1/4" = 1'-0"

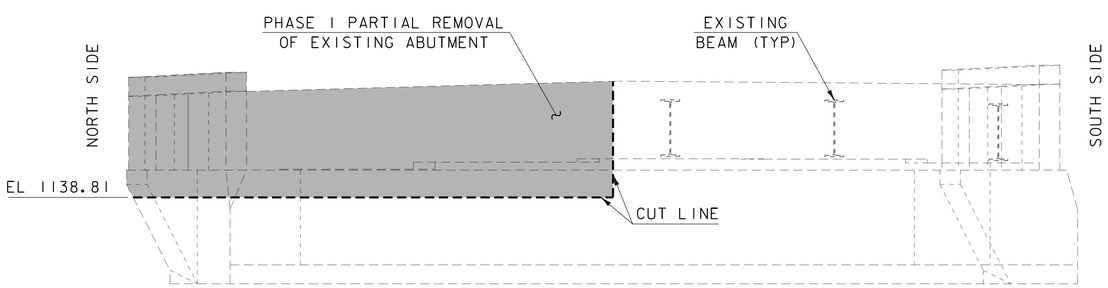

ABUTMENT NO. 2 ELEVATION PHASE I CONSTRUCTION

SCALE: 1/4" = 1'-0"

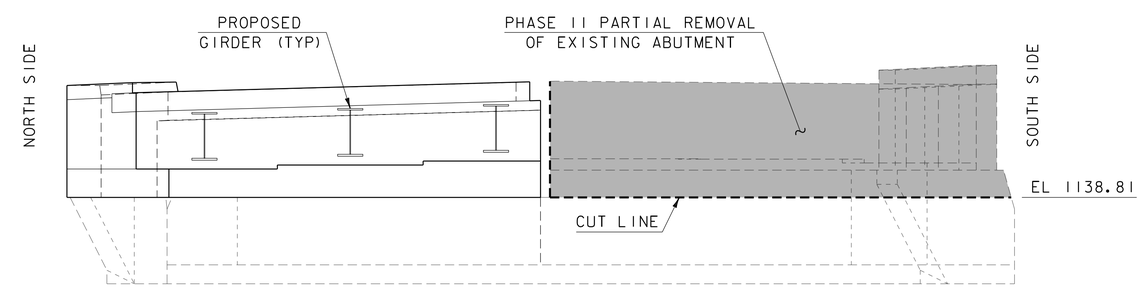

ABUTMENT NO. 2 ELEVATION PHASE II CONSTRUCTION

SCALE: 1/4" = 1'-0"

PROJECT NAME: DERBY	
PROJECT NUMBER: IM 091-3(49)	
FILE NAME: sl2a274sub.dgn	PLOT DATE: 02-JUN-2017
PROJECT LEADER: C. CARLSON	DRAWN BY: G. ROY
DESIGNED BY: D. PETERSON	CHECKED BY: J. LACY
ABUTMENT NO. 2 PHASE CONSTRUCTION DETAILS	SHEET 33 OF 73

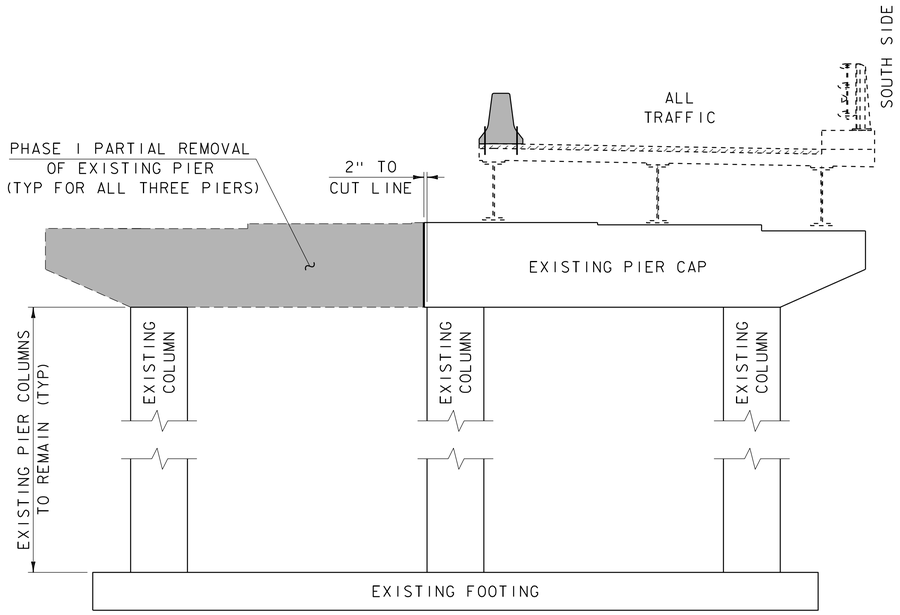

PIER PHASE I CONSTRUCTION

SCALE: 1/4" = 1'-0"

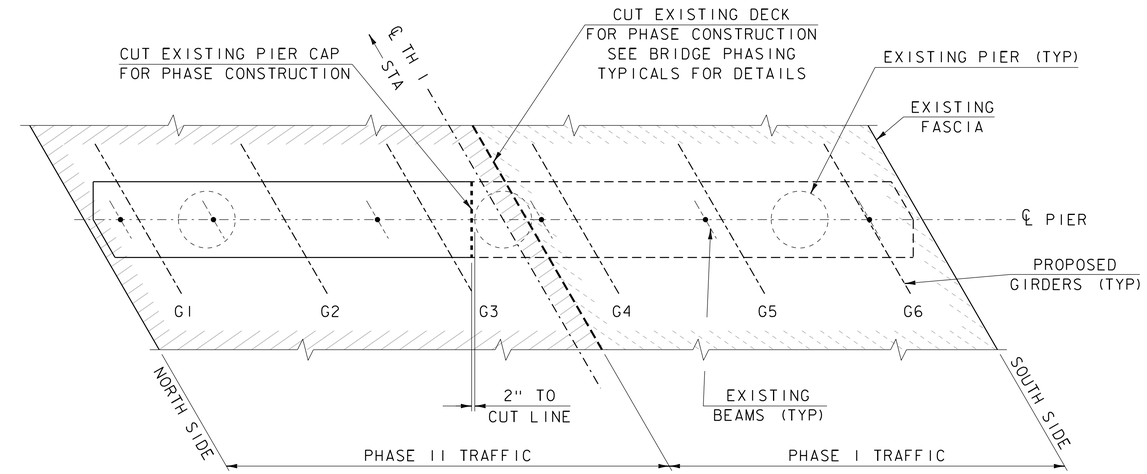

PHASE I & II DECK PLAN DIAGRAM

SCALE: 1/4" = 1'-0"

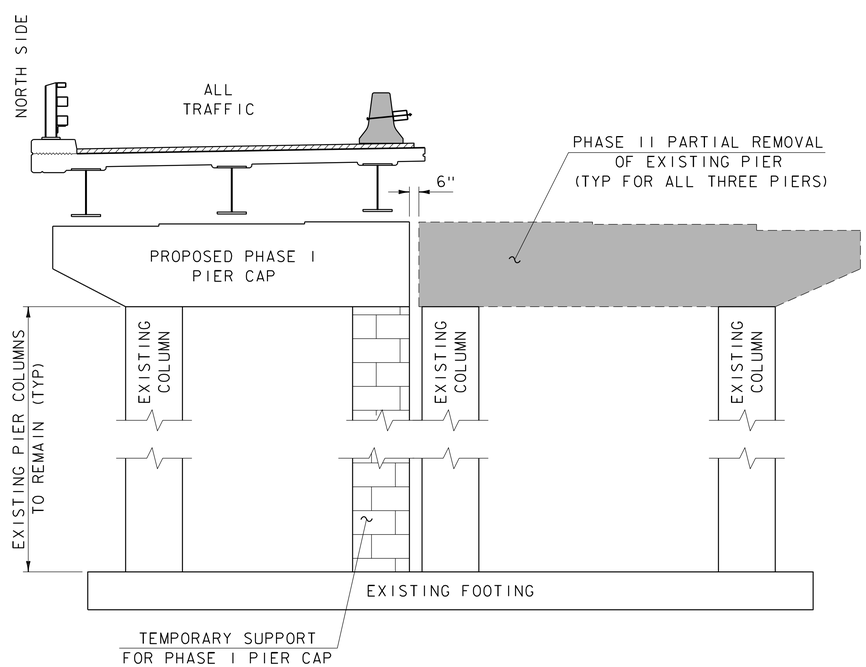

PIER PHASE II CONSTRUCTION

SCALE: 1/4" = 1'-0"

PROJECT NAME: DERBY	
PROJECT NUMBER: IM 091-3(49)	
FILE NAME: s12a274sub.dgn	PLOT DATE: 02-JUN-2017
PROJECT LEADER: C. CARLSON	DRAWN BY: M. LONGSTREET
DESIGNED BY: D. PETERSON	CHECKED BY: J. LACY
PIER PHASE CONSTRUCTION DETAILS	SHEET 34 OF 73

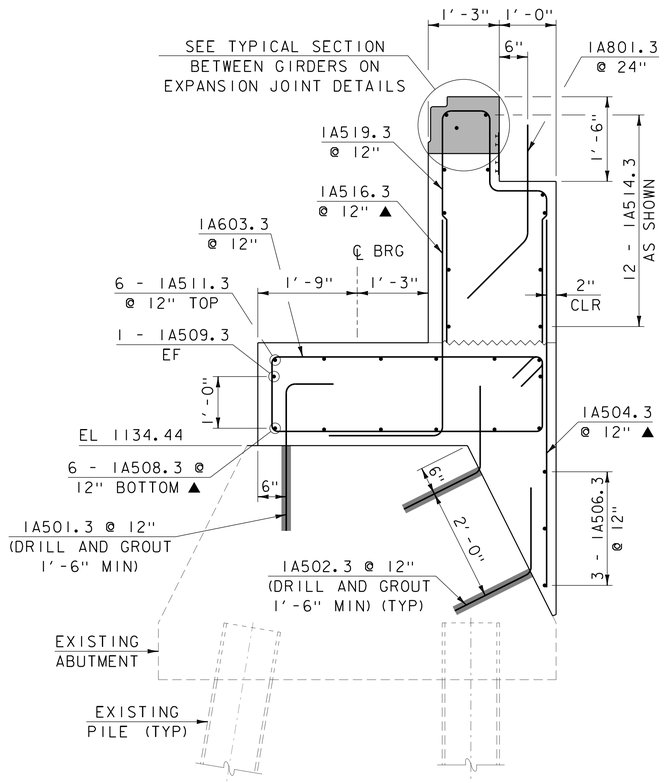

ABUTMENT NO. 1 SECTION A-A

SCALE: 3/4" = 1'-0"

(ABUTMENT NO. 2 SIMILAR)

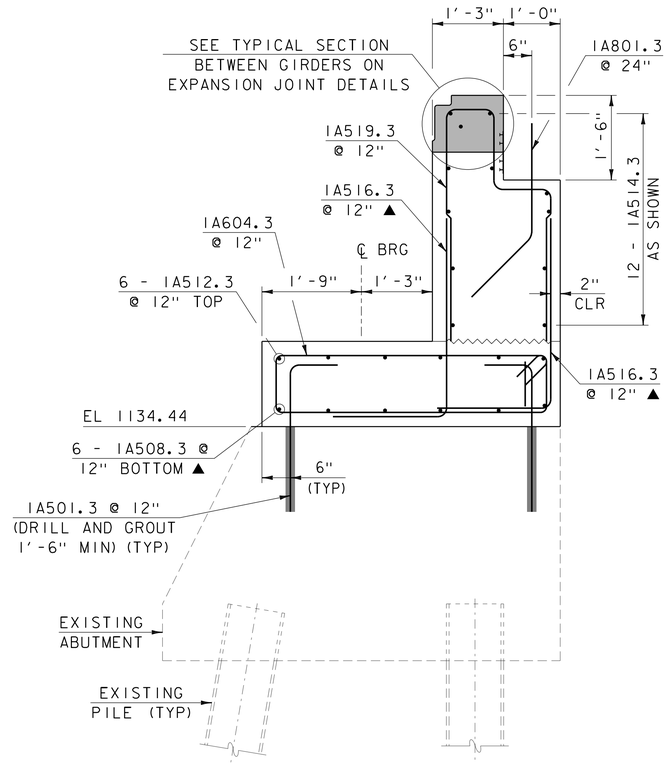

ABUTMENT NO. 1 SECTION B-B

SCALE: 3/4" = 1'-0"

(ABUTMENT NO. 2 SIMILAR)

✳ USE 1" DIA X 2'-2" THREADED ANCHOR STUDS FOR BRIDGE RAIL POSTS LOCATED ON WINGWALLS.

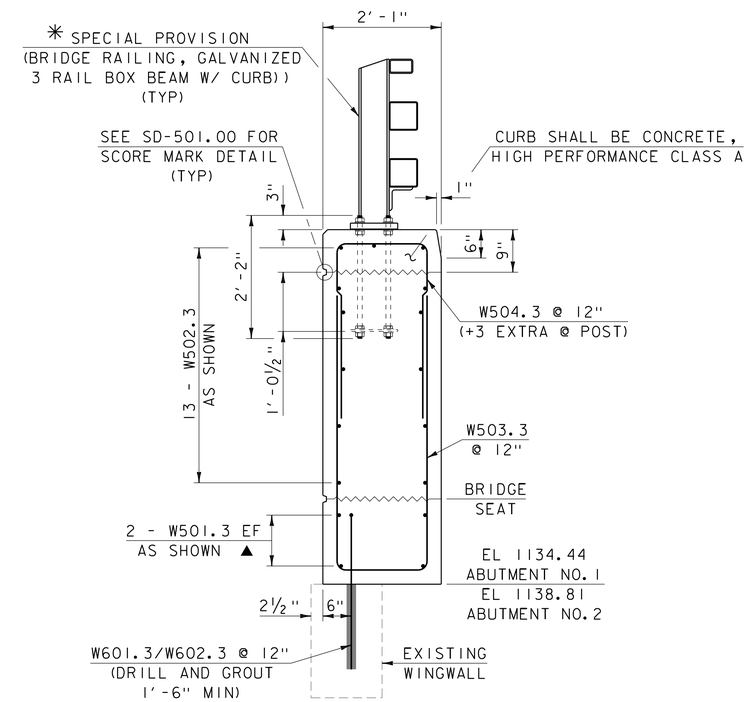

WINGWALL TYPICAL SECTION

SCALE: 3/4" = 1'-0"

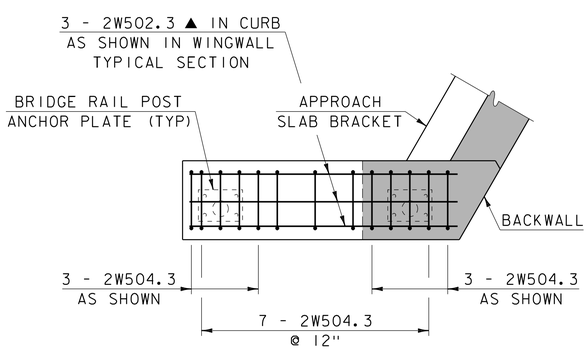

WINGWALL NO. 2 CURB REINFORCING

SCALE: 1/2" = 1'-0"

(OTHER WINGWALLS SIMILAR)

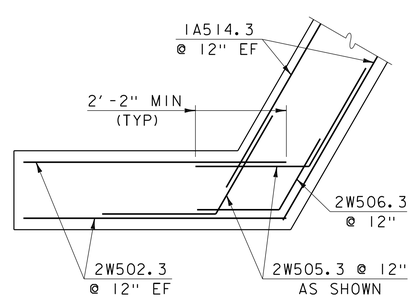

WINGWALL NO. 2 CORNER REINFORCING

SCALE: 1/2" = 1'-0"

(WINGWALL NO. 3 SIMILAR)

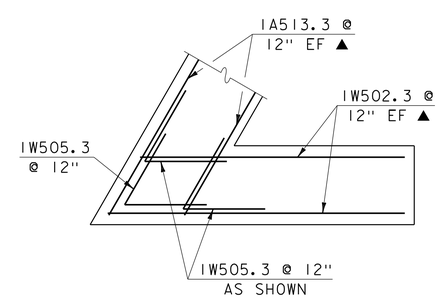

WINGWALL NO. 1 CORNER REINFORCING

SCALE: 1/2" = 1'-0"

(WINGWALL NO. 4 SIMILAR)

NOTE:

1. ▬ ABUTMENT PORTION TO BE CAST WITH ITEM 501.33, "CONCRETE, HIGH PERFORMANCE CLASS A" FOR EXPANSION JOINT.

NOTE:

NF = NEAR FACE
FF = FAR FACE
EF = EACH FACE
▲ = CUT TO FIT IN FIELD
3" CLEAR UNLESS OTHERWISE NOTED
2'-2" BAR LAP UNLESS OTHERWISE NOTED

PROJECT NAME: DERBY	
PROJECT NUMBER: IM 091-3(49)	
FILE NAME: s12a274sub.dgn	PLOT DATE: 02-JUN-2017
PROJECT LEADER: C. CARLSON	DRAWN BY: G. ROY
DESIGNED BY: D. PETERSON	CHECKED BY: J. LACY
SECTIONS AND WINGWALL CORNER DETAILS	SHEET 35 OF 73

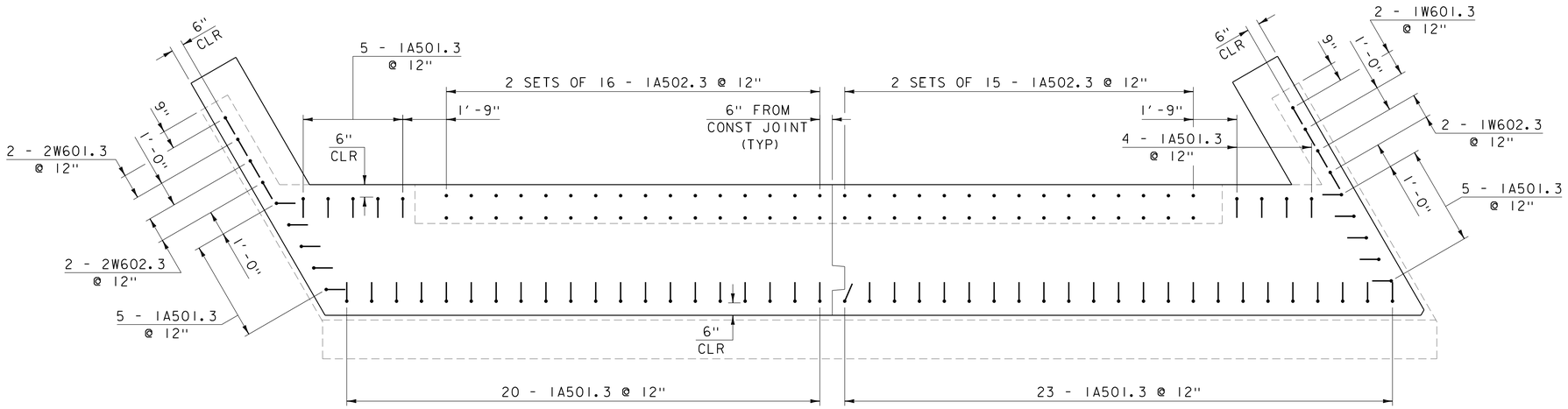

ABUTMENT NO. 1 DOWEL LAYOUT

SCALE: 3/8" = 1'-0"

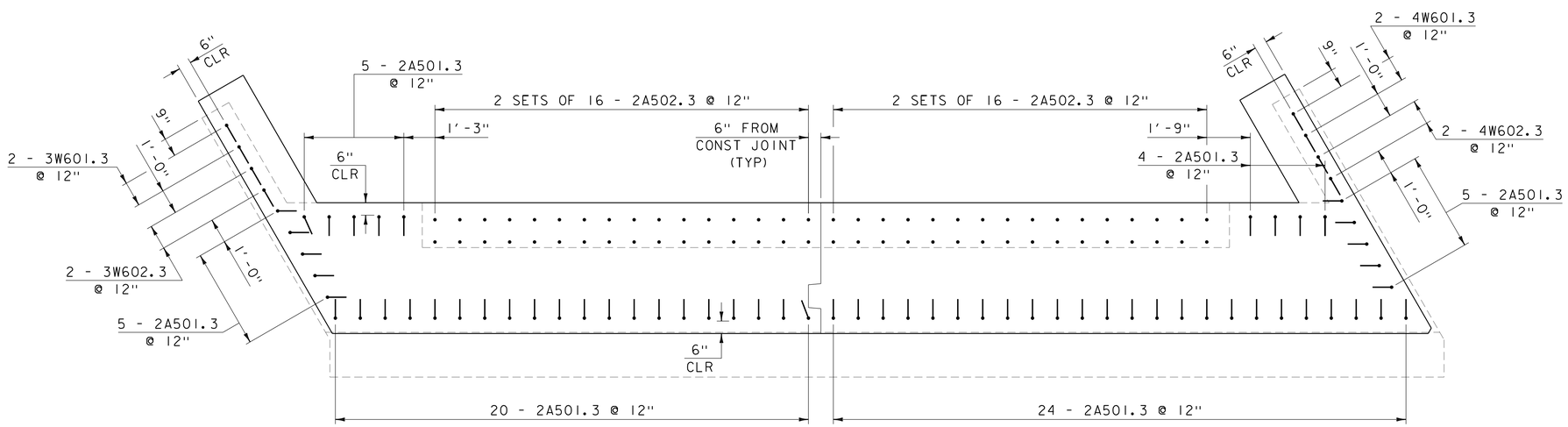

ABUTMENT NO. 2 DOWEL LAYOUT

SCALE: 3/8" = 1'-0"

PROJECT NAME: DERBY	
PROJECT NUMBER: IM 091-3(49)	
FILE NAME: sl2a274sub.dgn	PLOT DATE: 02-JUN-2017
PROJECT LEADER: C. CARLSON	DRAWN BY: G. ROY
DESIGNED BY: D. PETERSON	CHECKED BY: J. LACY
ABUTMENT DOWEL LAYOUT	SHEET 36 OF 73

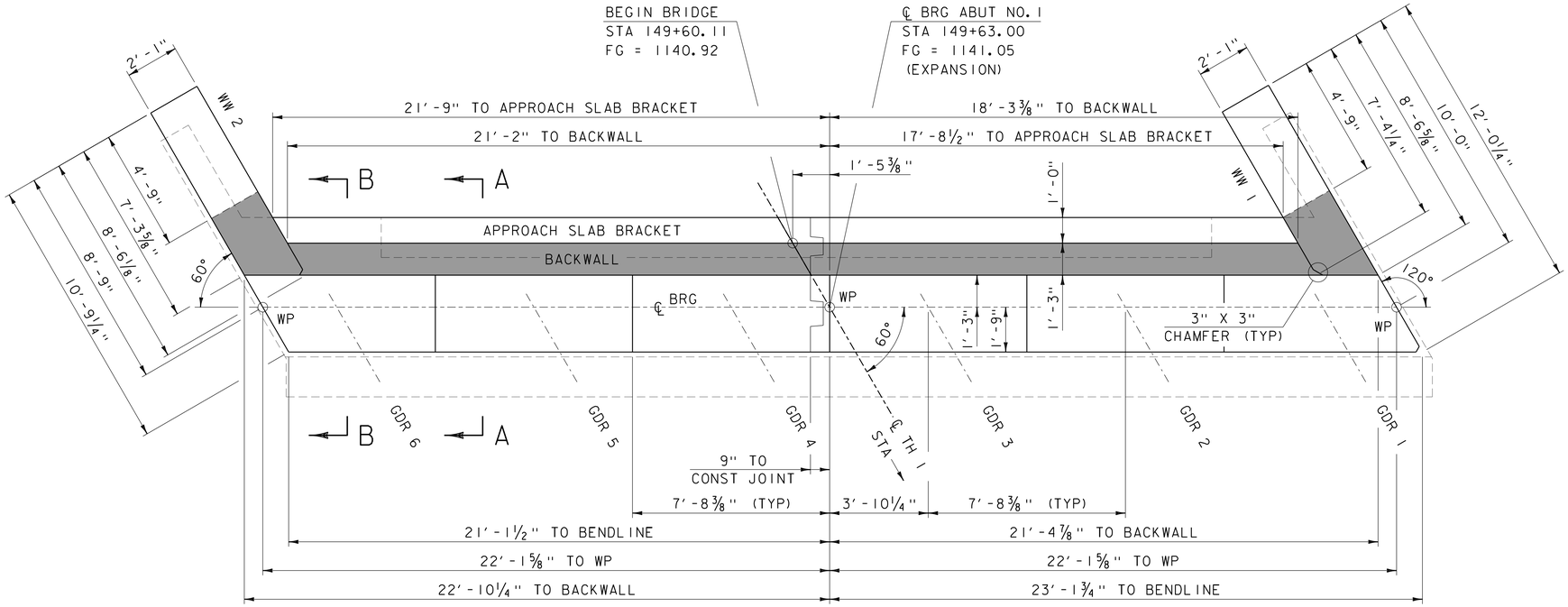

ABUTMENT NO. 1 PLAN

SCALE: ⅜" = 1'-0"

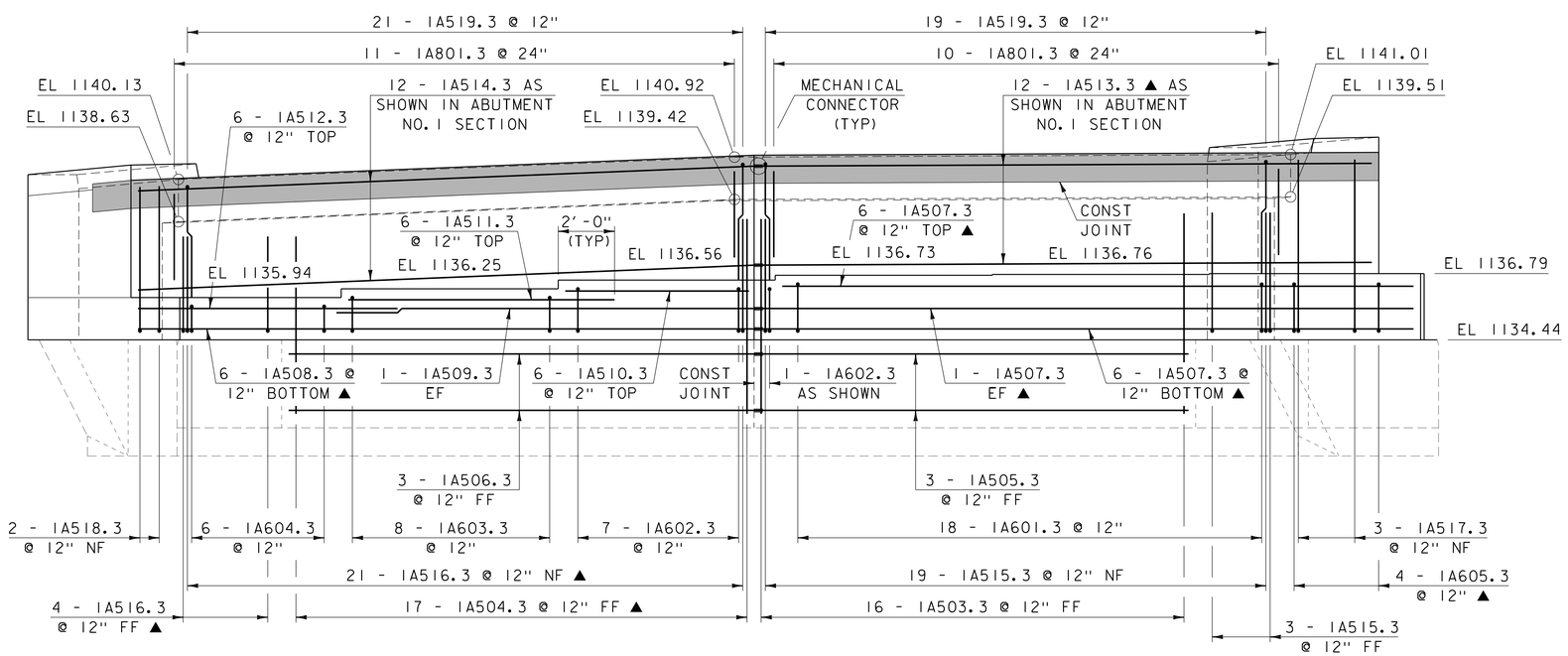

ABUTMENT NO. 1 ELEVATION

SCALE: ⅜" = 1'-0"

NOTES:

1. ELEVATIONS FOR TOP OF BACKWALL AND APPROACH SLAB BRACKET ARE GIVEN AT BACK FACE OF BACKWALL.
2. ▬ ABUTMENT PORTION TO BE CAST WITH ITEM 501.33, "CONCRETE, HIGH PERFORMANCE CLASS A" FOR EXPANSION JOINT.
3. DOWELS NOT SHOWN FOR CLARITY.

NOTE:

NF = NEAR FACE
FF = FAR FACE
EF = EACH FACE
▲ = CUT TO FIT IN FIELD
3" CLEAR UNLESS OTHERWISE NOTED
2'-2" BAR LAP UNLESS OTHERWISE NOTED

PROJECT NAME: DERBY	
PROJECT NUMBER: IM 091-3(49)	
FILE NAME: sl2a274sub.dgn	PLOT DATE: 02-JUN-2017
PROJECT LEADER: C. CARLSON	DRAWN BY: G. ROY
DESIGNED BY: D. PETERSON	CHECKED BY: J. LACY
ABUTMENT NO. 1 DETAILS	SHEET 37 OF 73

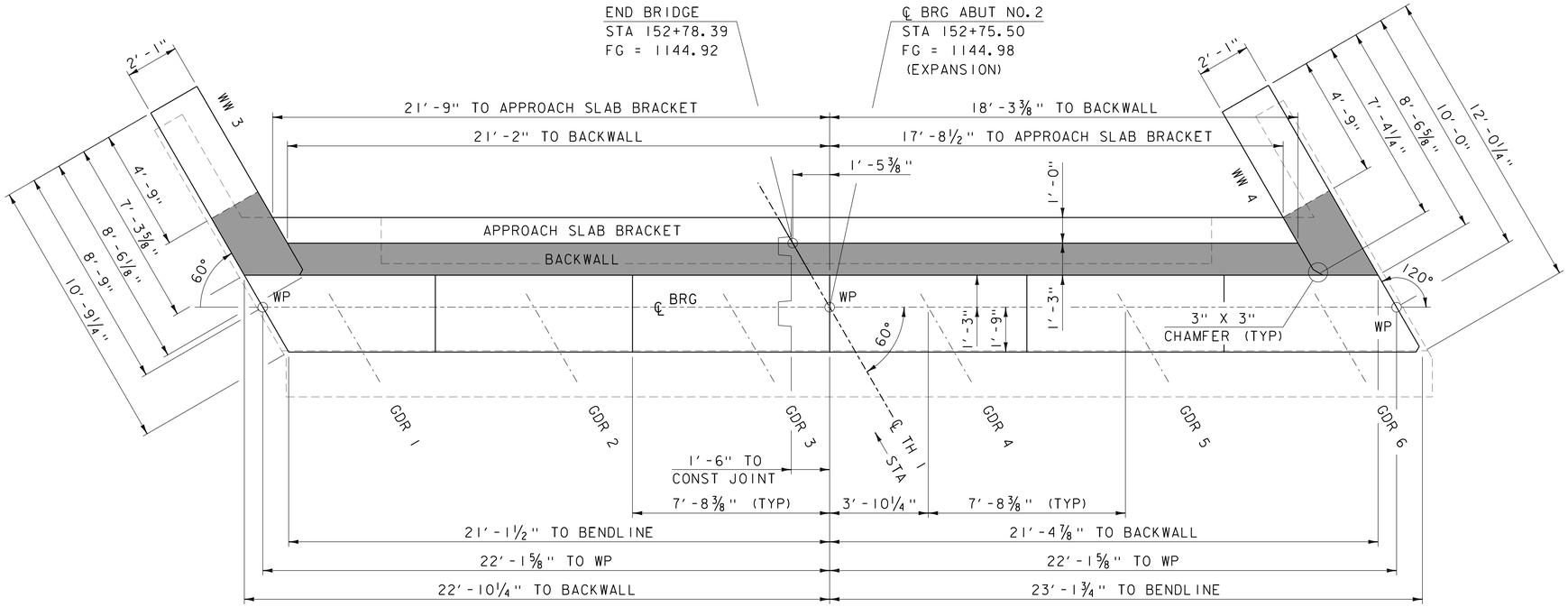

ABUTMENT NO. 2 PLAN

SCALE: 3/8" = 1'-0"

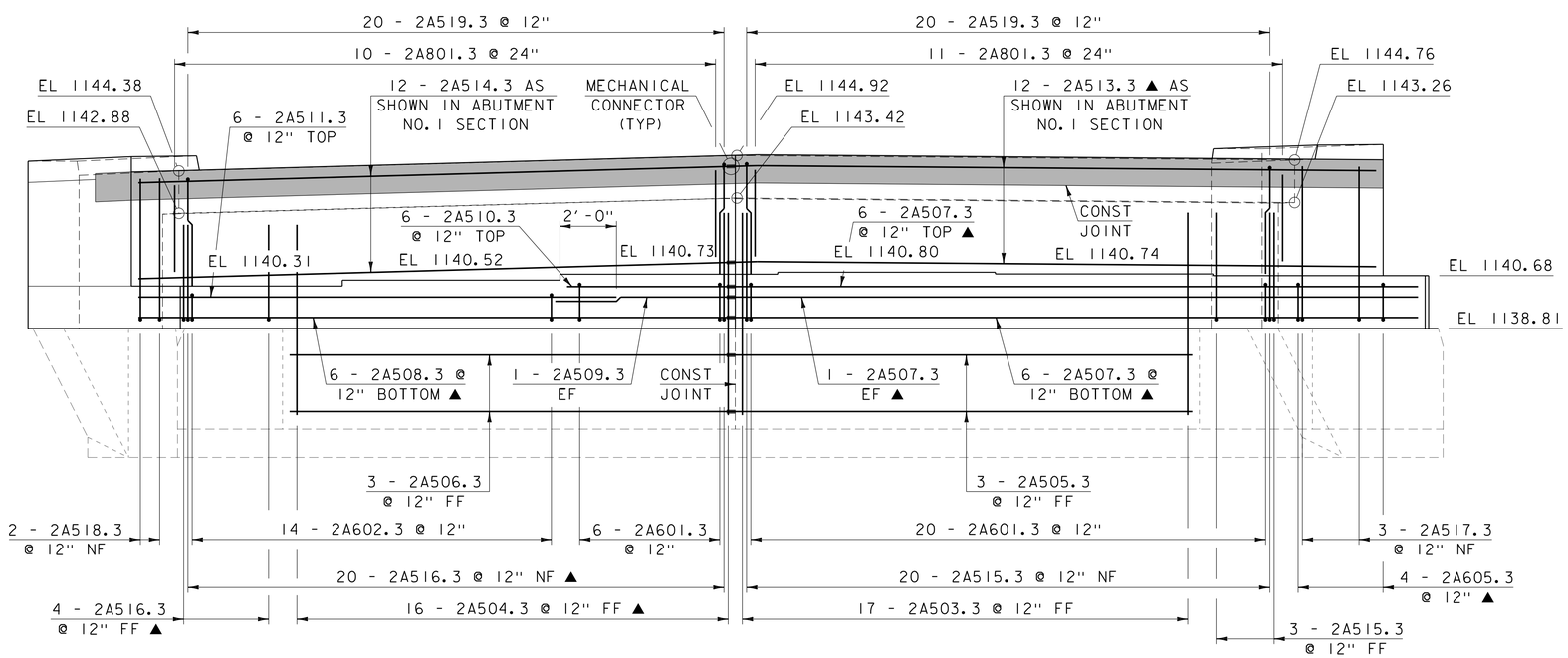

ABUTMENT NO. 2 ELEVATION

SCALE: 3/8" = 1'-0"

NOTES:

1. ELEVATIONS FOR TOP OF BACKWALL AND APPROACH SLAB BRACKET ARE GIVEN AT BACK FACE OF BACKWALL.
2. ▬ ABUTMENT PORTION TO BE CAST WITH ITEM 501.33, "CONCRETE, HIGH PERFORMANCE CLASS A" FOR EXPANSION JOINT.
3. DOWELS NOT SHOWN FOR CLARITY.

NOTE:

NF = NEAR FACE
FF = FAR FACE
EF = EACH FACE
▲ = CUT TO FIT IN FIELD
3" CLEAR UNLESS OTHERWISE NOTED
2'-2" BAR LAP UNLESS OTHERWISE NOTED

PROJECT NAME: DERBY	
PROJECT NUMBER: IM 091-3(49)	
FILE NAME: sl2a274sub.dgn	PLOT DATE: 02-JUN-2017
PROJECT LEADER: C. CARLSON	DRAWN BY: G. ROY
DESIGNED BY: D. PETERSON	CHECKED BY: J. LACY
ABUTMENT NO. 2 DETAILS	SHEET 38 OF 73

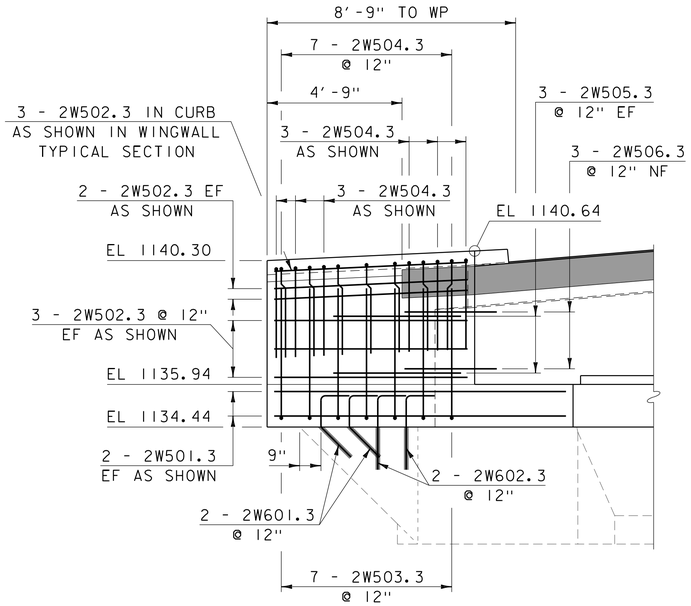

WINGWALL NO. 2 ELEVATION

SCALE: 3/8" = 1'-0"

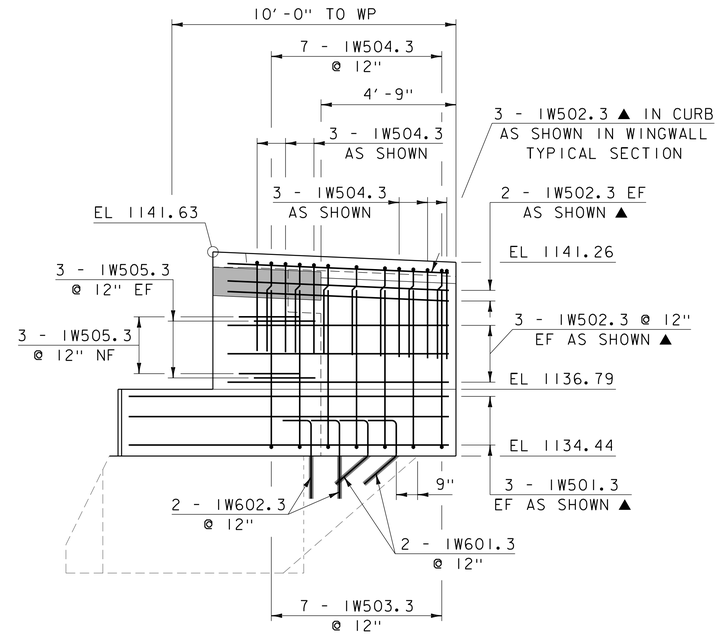

WINGWALL NO. 1 ELEVATION

SCALE: 3/8" = 1'-0"

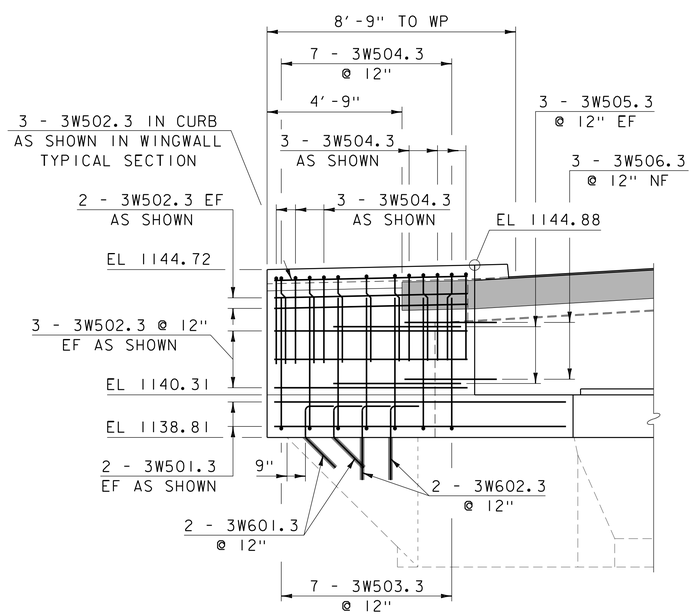

WINGWALL NO. 3 ELEVATION

SCALE: 3/8" = 1'-0"

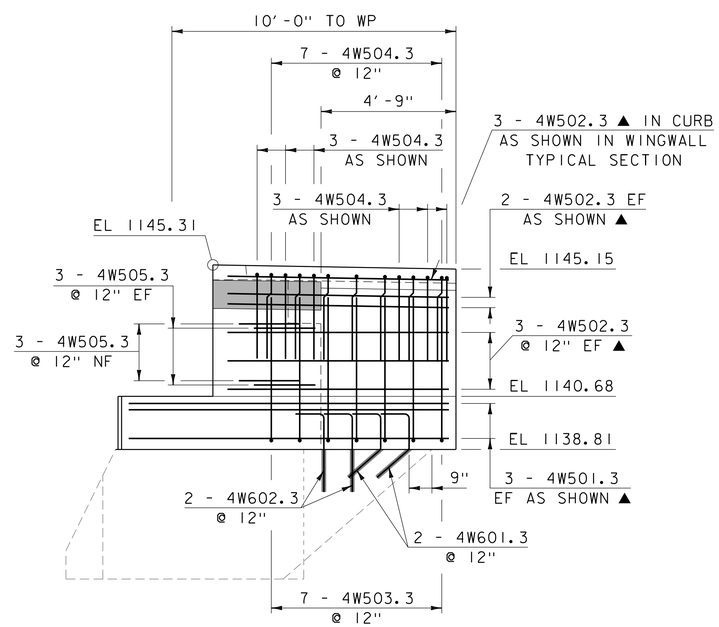

WINGWALL NO. 4 ELEVATION

SCALE: 3/8" = 1'-0"

NOTE:

1. ▬ ABUTMENT PORTION TO BE CAST WITH ITEM 501.33, "CONCRETE, HIGH PERFORMANCE CLASS A" FOR EXPANSION JOINT.

NOTE:

NF = NEAR FACE
FF = FAR FACE
EF = EACH FACE
▲ = CUT TO FIT IN FIELD
3" CLEAR UNLESS OTHERWISE NOTED
2'-2" BAR LAP UNLESS OTHERWISE NOTED

PROJECT NAME: DERBY	
PROJECT NUMBER: IM 091-3(49)	
FILE NAME: sl2a274sub.dgn	PLOT DATE: 02-JUN-2017
PROJECT LEADER: C. CARLSON	DRAWN BY: G. ROY
DESIGNED BY: D. PETERSON	CHECKED BY: J. LACY
WINGWALL DETAILS	SHEET 39 OF 73

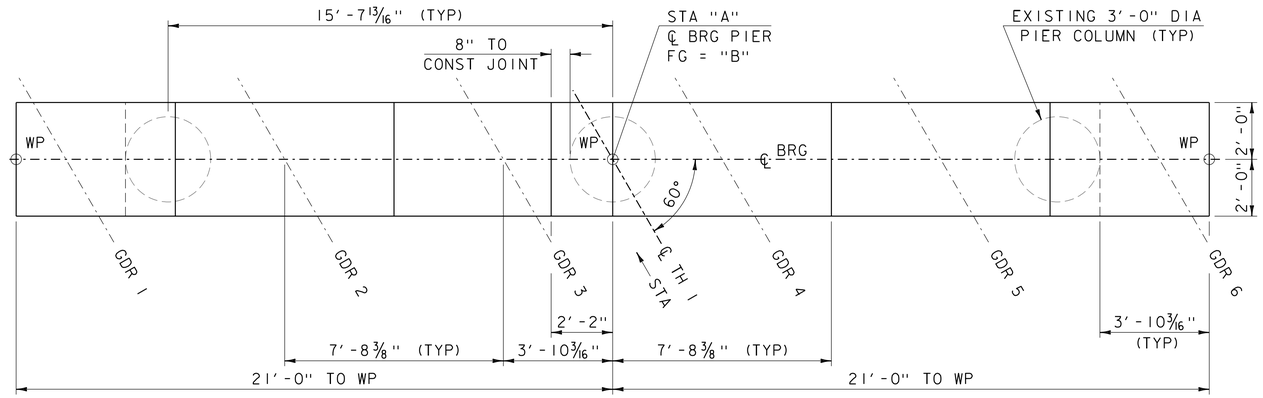

TYPICAL PIER CAP PLAN

SCALE: 3/8" = 1'-0"

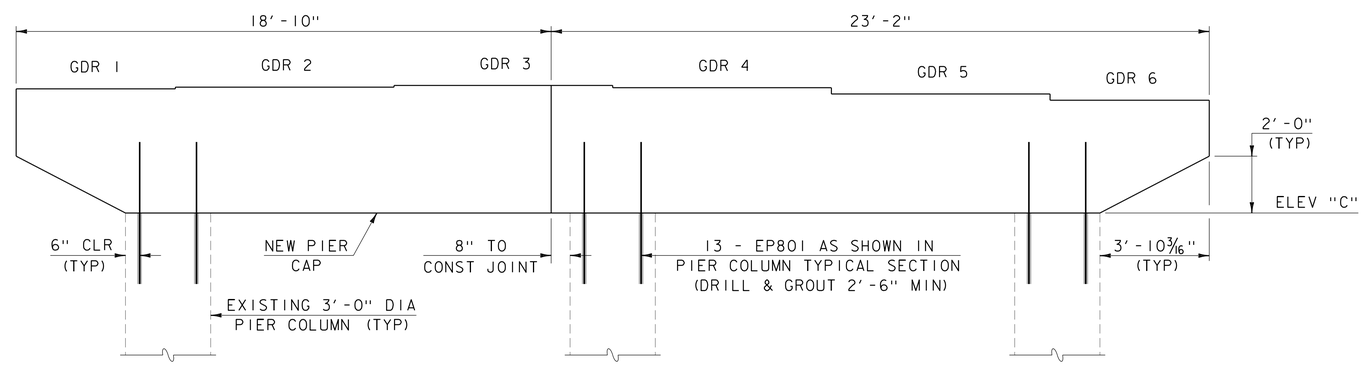

TYPICAL PIER ELEVATION

SCALE: 3/8" = 1'-0"
(LOOKING UPSTATION)

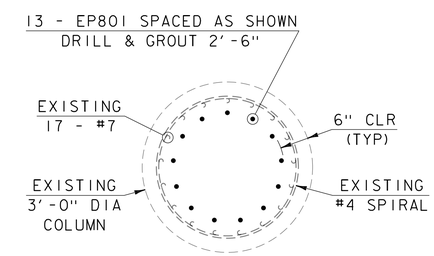

PIER COLUMN TYPICAL SECTION

SCALE: 3/4" = 1'-0"

PIER STATION AND ELEVATIONS

PIER	"A"	"B"	"C"	GDR 1	GDR 2	GDR 3	GDR 4	GDR 5	GDR 6
1	150+80.00	1144.83	1135.88	1140.25	1140.31	1140.37	1140.29	1140.07	1139.85
2	151+49.00	1145.77	1137.10	1141.35	1141.47	1141.58	1141.55	1141.39	1141.23
3	152+28.00	1145.65	1136.83	1141.08	1141.26	1141.43	1141.47	1141.37	1141.26

NOTE:

▲ = CUT TO FIT IN FIELD
4" CLEAR UNLESS OTHERWISE NOTED
2'-2" BAR LAP UNLESS OTHERWISE NOTED

PROJECT NAME: DERBY
PROJECT NUMBER: IM 091-3(49)

FILE NAME: sl2a274sub.dgn
PROJECT LEADER: C. CARLSON
DESIGNED BY: D. PETERSON
PIER DETAILS

PLOT DATE: 02-JUN-2017
DRAWN BY: G. ROY
CHECKED BY: J. LACY
SHEET 40 OF 73

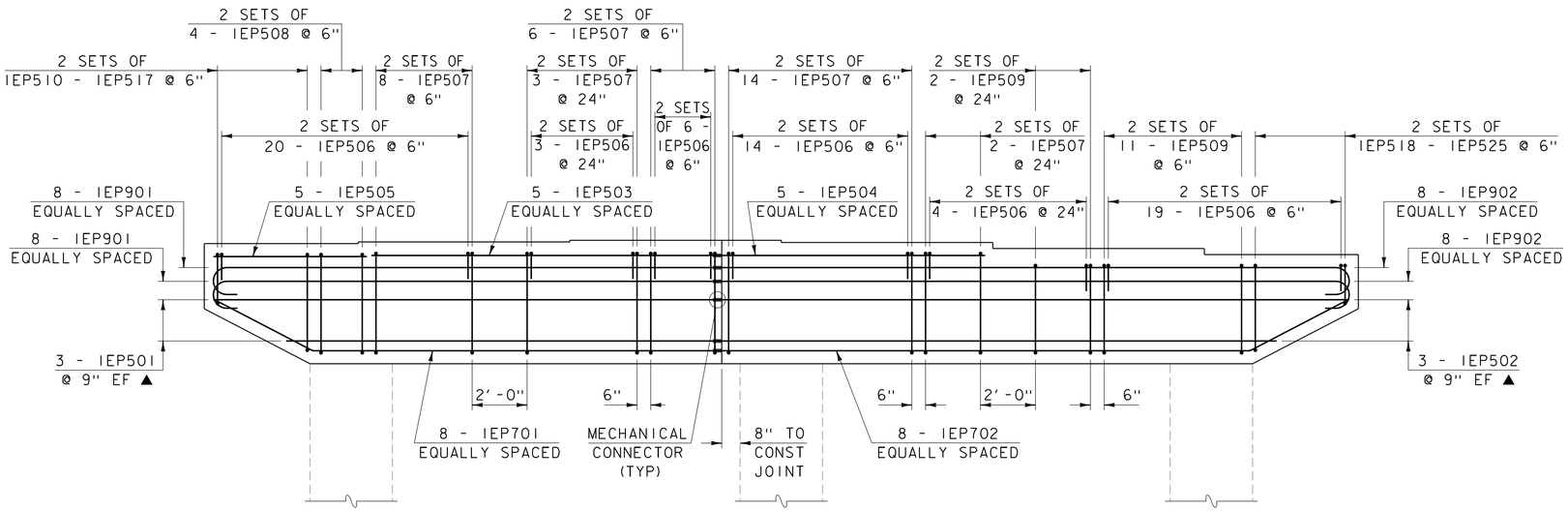

PIER NO. 1 ELEVATION

SCALE: 3/8" = 1'-0"
(LOOKING UPSTATION)

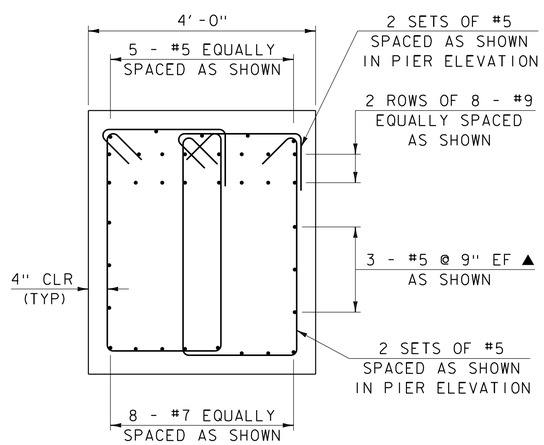

PIER CAP TYPICAL SECTION

SCALE: 3/4" = 1'-0"

NOTE:

▲ = CUT TO FIT IN FIELD
4" CLEAR UNLESS OTHERWISE NOTED
2'-2" BAR LAP UNLESS OTHERWISE NOTED

PROJECT NAME: DERBY	
PROJECT NUMBER: IM 091-3(49)	
FILE NAME: sl2a274sub.dgn	PLOT DATE: 02-JUN-2017
PROJECT LEADER: C. CARLSON	DRAWN BY: G. ROY
DESIGNED BY: D. PETERSON	CHECKED BY: J. LACY
PIER NO. 1 REINFORCING DETAILS	SHEET 41 OF 73

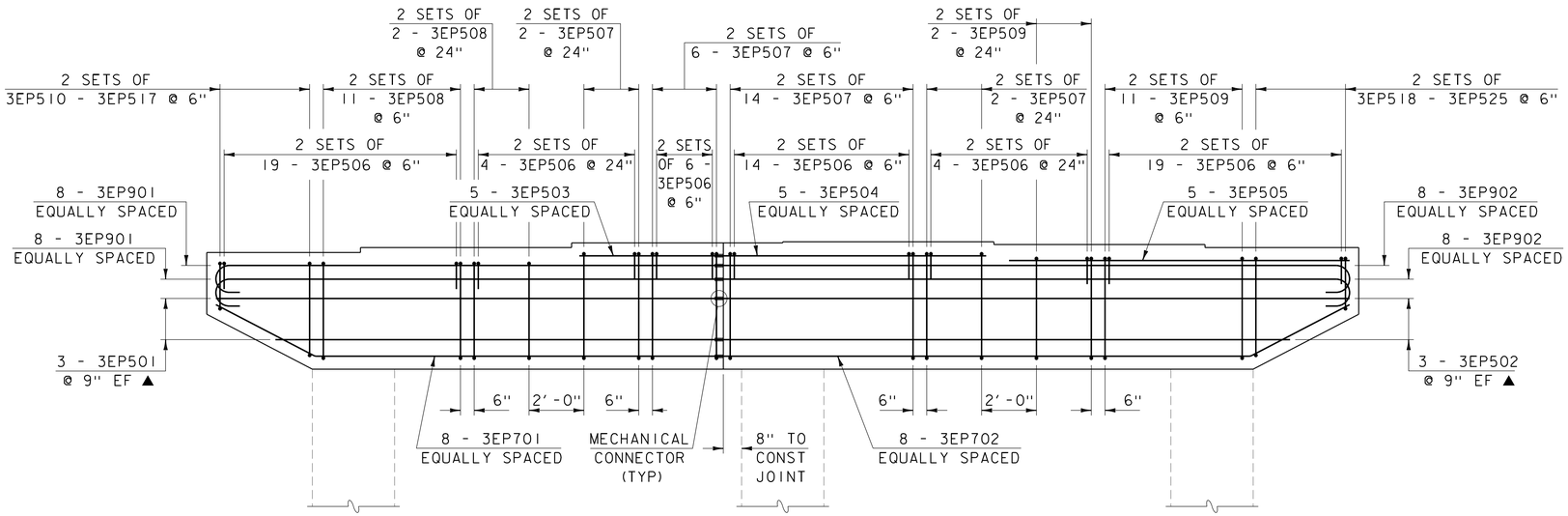

PIER NO. 3 ELEVATION

SCALE: 3/8" = 1'-0"
(LOOKING UPSTATION)

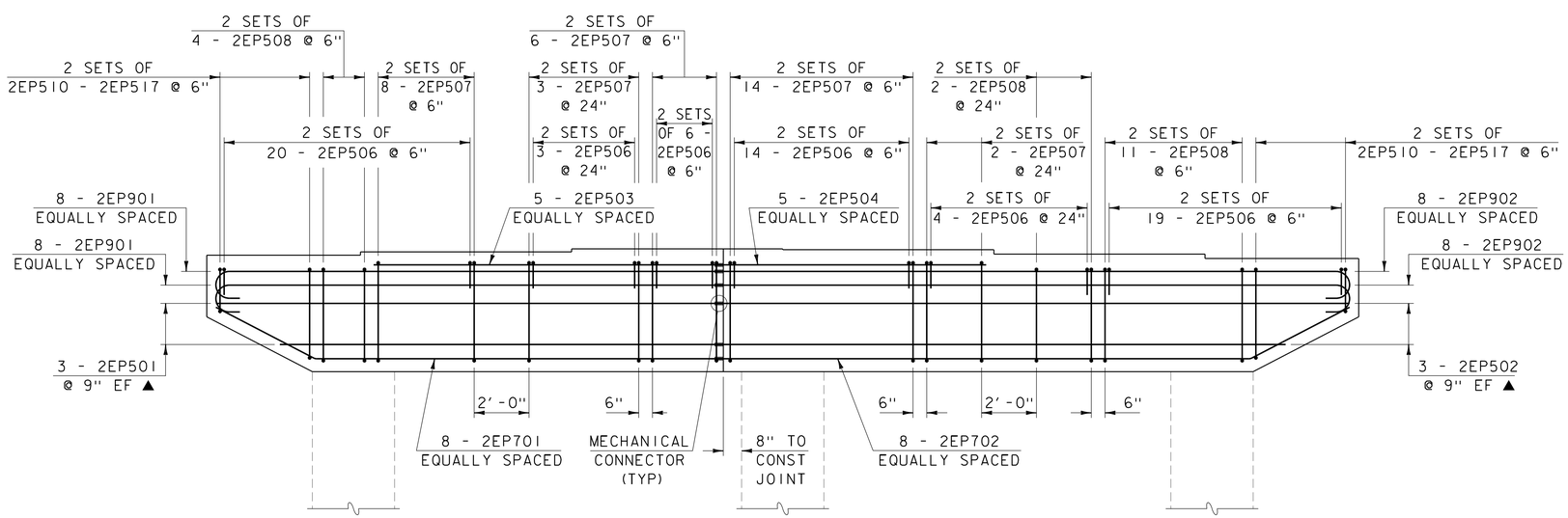

PIER NO. 2 ELEVATION

SCALE: 3/8" = 1'-0"
(LOOKING UPSTATION)

NOTE:

▲ = CUT TO FIT IN FIELD
4" CLEAR UNLESS OTHERWISE NOTED
2'-2" BAR LAP UNLESS OTHERWISE NOTED

PROJECT NAME: DERBY	
PROJECT NUMBER: IM 091-3(49)	
FILE NAME: sl2a274sub.dgn	PLOT DATE: 02-JUN-2017
PROJECT LEADER: C. CARLSON	DRAWN BY: G. ROY
DESIGNED BY: D. PETERSON	CHECKED BY: J. LACY
PIERS NO. 2 AND 3 REINFORCING DETAILS	SHEET 42 OF 73

STATE OF VERMONT
AGENCY OF TRANSPORTATION

REINFORCING STEEL SCHEDULE

ITEM	EACH	SIZE	LENGTH	MARK	TYPE	A	B	C	D	E	F	G	H	J	K	R	O
	DECK																
▲	418	5	19'- 11"	S501.3	STR												
✳ ▲	625	5	17'- 8"	S502.3	STR												
▲	418	5	20'- 1"	S503.3	STR												
▲	624	5	17'- 10"	S504.3	STR												
	432	5	41'- 2"	S505.3	STR												
	102	5	31'- 0"	S506.3	STR												
	68	5	28'- 1"	S507.3	STR												
	34	5	25'- 5"	S508.3	STR												
	8	5	22'- 8"	S509.3	STR												
	8	5	23'- 3"	S510.3	STR												
✳	79	5	5'- 0"	S511.3	STR												
	860	5	5'- 1"	S512.3	S5	0'- 10"	0'- 11"	1'- 7"	0'- 11"			0'- 10"					
	68	5	4'- 10"	S513.3	S5	0'- 10"	0'- 8"	1'- 10"	0'- 8"			0'- 10"					
▲	1252	6	4'- 5"	S601.3	STR												
△	274	6	40'- 0"	S602.3	STR												
	APPROACH SLAB NO. 1																
✳	22	5	20'- 4"	1EAS501	STR												
	21	5	20'- 9"	1EAS502	STR												
✳	43	9	20'- 9"	1EAS901	1	1'- 3"	19'- 6"					---		1'- 0"			
	APPROACH SLAB NO. 2																
✳	22	5	20'- 4"	2EAS501	STR												
	21	5	20'- 9"	2EAS502	STR												
✳	43	9	20'- 9"	2EAS901	1	1'- 3"	19'- 6"					---		1'- 0"			
	ABUTMENT NO. 1																
✳	17	5	7'- 3"	1A503.3	STR												
✳ ▲	18	5	7'- 2"	1A504.3	STR												
	3	5	15'- 5"	1A505.3	STR												
	3	5	16'- 6"	1A506.3	STR												
▲	14	5	23'- 4"	1A507.3	STR												
▲	6	5	23'- 0"	1A508.3	STR												
	2	5	14'- 10"	1A509.3	STR												
	6	5	6'- 6"	1A510.3	STR												
	6	5	9'- 6"	1A511.3	STR												
	6	5	10'- 4"	1A512.3	STR												
▲	12	5	21'- 8"	1A513.3	STR												
	12	5	22'- 0"	1A514.3	STR												
	62	5	3'- 5"	1A501.3	17		2'- 7"	0'- 10"	---								
	62	5	3'- 0"	1A502.3	19		1'- 6"	1'- 6"	---				1'- 4"		0'- 8"		
	22	5	6'- 5"	1A515.3	17		4'- 5"	2'- 0"	---								
▲	25	5	6'- 3"	1A516.3	17		4'- 3"	2'- 0"	---								
	3	5	8'- 2"	1A517.3	17		6'- 2"	2'- 0"	---								
	2	5	7'- 2"	1A518.3	17		5'- 2"	2'- 0"	---								
	40	5	9'- 8"	1A519.3	23		3'- 11"	0'- 10"	1'- 5"	1'- 0"	2'- 6"		---		---		
	18	6	14'- 6"	1A601.3	T1	0'- 8"	4'- 10"	1'- 9"	4'- 10"	1'- 9"		0'- 8"					
	8	6	14'- 2"	1A602.3	T1	0'- 8"	4'- 10"	1'- 7"	4'- 10"	1'- 7"		0'- 8"					
	8	6	13'- 8"	1A603.3	T1	0'- 8"	4'- 10"	1'- 4"	4'- 10"	1'- 4"		0'- 8"					
	6	6	13'- 0"	1A604.3	T1	0'- 8"	4'- 10"	1'- 0"	4'- 10"	1'- 0"		0'- 8"					
▲	4	6	11'- 5"	1A605.3	17		4'- 10"	1'- 9"	4'- 10"								
	21	8	3'- 6"	1A801.3	19		1'- 6"	2'- 0"	---				1'- 1"		1'- 1"		
	WINGWALL NO. 1																
▲	6	5	11'- 3"	1W501.3	STR												
▲	13	5	7'- 10"	1W502.3	STR												
	7	5	12'- 9"	1W503.3	17		5'- 7"	1'- 7"	5'- 7"								
	13	5	8'- 1"	1W504.3	17		3'- 3"	1'- 7"	3'- 3"								
	9	5	4'- 4"	1W505.3	27		2'- 2"	2'- 2"					1'- 11"		1'- 1"		
	2	6	3'- 9"	1W601.3	16	---	1'- 0"	1'- 3"	1'- 6"				1'- 0"		1'- 2"		
	2	6	3'- 9"	1W602.3	17		1'- 0"	2'- 9"	---								

ITEM	EACH	SIZE	LENGTH	MARK	TYPE	A	B	C	D	E	F	G	H	J	K	R	O
	WINGWALL NO. 2																
	4	5	10'- 5"	2W501.3	STR												
▲	13	5	6'- 11"	2W501.3	STR												
	7	5	10'- 9"	2W503.3	17		4'- 7"	1'- 7"	4'- 7"								
	13	5	8'- 1"	2W504.3	17		3'- 3"	1'- 7"	3'- 3"								
	6	5	6'- 0"	2W505.3	19		3'- 0"	3'- 0"	---				2'- 7"		1'- 6"		
	3	5	4'- 4"	2W506.3	19		2'- 2"	2'- 2"	---				1'- 11"		1'- 1"		
	2	6	3'- 9"	2W601.3	16	---	1'- 0"	1'- 3"	1'- 6"				1'- 1"		1'- 1"		
	2	6	3'- 9"	2W602.3	17		1'- 0"	2'- 9"	---								
	ABUTMENT NO. 2																
✳	18	5	7'- 4"	2A503.3	STR												
✳ ▲	17	5	7'- 4"	2A504.3	STR												
	3	5	16'- 2"	2A505.3	STR												
	3	5	15'- 9"	2A506.3	STR												
▲	14	5	24'- 1"	2A507.3	STR												
▲	6	5	22'- 3"	2A508.3	STR												
	2	5	6'- 5"	2A509.3	STR												
	6	5	5'- 11"	2A510.3	STR												
	6	5	17'- 1"	2A511.3	STR												
				2A512.3		NOT USED											
▲	12	5	22'- 5"	2A513.3	STR												
	12	5	21'- 3"	2A514.3	STR												
	63	5	3'- 5"	2A501.3	17		2'- 7"	0'- 10"	---								
	64	5	3'- 0"	2A502.3	19		1'- 6"	1'- 6"	---				1'- 4"		0'- 8"		
	23	5	6'- 0"	2A515.3	17		4'- 0"	2'- 0"	---								
▲	24	5	6'- 0"	2A516.3	17		4'- 0"	2'- 0"	---								
	3	5	7'- 5"	2A517.3	17		5'- 5"	2'- 0"	---								
	2	5	7'- 0"	2A518.3	17		5'- 0"	2'- 0"	---								
	40	5	9'- 4"	2A519.3	23		3'- 9"	0'- 10"	1'- 5"	1'- 0"	2'- 4"		---		---		
	21	8	3'- 6"	2A801.3	19		1'- 6"	2'- 0"	---				1'- 1"		1'- 1"		
	26	6	13'- 8"	2A601.3	T1	0'- 8"	4'- 10"	1'- 4"	4'- 10"	1'- 4"		0'- 8"					
	14	6	13'- 0"	2A602.3	T1	0'- 8"	4'- 10"	1'- 0"	4'- 10"	1'- 0"		0'- 8"					
				2A603.3		NOT USED											
				2A604.3		NOT USED											
▲	4	6	11'- 0"	2A605.3	17		4'- 10"	1'- 4"	4'- 10"								
	WINGWALL NO. 3																
	4	5	10'- 5"	3W501.3	STR												
▲	13	5	6'- 11"	3W502.3	STR												
	7	5	10'- 9"	3W503.3	17		4'- 7"	1'- 7"	4'- 7"								
	13	5	7'- 9"	3W504.3	17		3'- 1"	1'- 7"	3'- 1"								
	6	5	6'- 0"	3W505.3	19		3'- 0"	3'- 0"	---				2'- 7"		1'- 6"		
	3	5	4'- 4"	3W506.3	19		2'- 2"	2'- 2"	---				1'- 11"		1'- 1"		
	2	6	3'- 9"	3W601.3	16	---	1'- 0"	1'- 3"	1'- 6"				1'- 1"		1'- 1"		
	2	6	3'- 9"	3W602.3	17		1'- 0"	2'- 9"	---								
	WINGWALL NO. 4																
▲	6	5	11'- 3"	4W501.3	STR												
▲	13	5	7'- 10"	4W502.3	STR												
	7	5	11'- 9"	4W503.3	17		5'- 1"	1'- 7"	5'- 1"								
	13	5	7'- 9"	4W504.3	17		3'- 1"	1'- 7"	3'- 1"								
	9	5	4'- 4"	4W505.3	27		2'- 2"	2'- 2"					1'- 11"		1'- 1"		
	2	6	3'- 9"	4W601.3	16	---	1'- 0"	1'- 3"	1'- 6"				1'- 0"		1'- 2"		
	2	6	3'- 9"	4W602.3	17		1'- 0"	2'- 9"	---								

~ NOTES ~

1. UNLESS OTHERWISE DESIGNATED, ALL BAR REINFORCEMENT FOR CONCRETE IN SIZES UP TO AND INCLUDING NO. 18 SHALL CONFORM TO THE REQUIREMENTS OF THE "SPECIFICATIONS FOR DEFORMED BILLET-STEEL BARS FOR CONCRETE REINFORCEMENT", AASHTO M 31 (ASTM A 615-SI). ALL BARS SHALL BE GRADE 60, UNLESS OTHERWISE DESIGNATED.
2. FOR TYPICAL BENDING DETAILS, RECOMMENDED PIN DIAMETER "D" OF BENDS AND HOOKS, AND OTHER STANDARD PRACTICE, SEE CURRENT CONCRETE REINFORCING STEEL INSTITUTE "MANUAL OF STANDARD PRACTICE".
3. BARS WHICH REQUIRE MORE ACCURATE BENDING THAN STANDARD PRACTICES SHOULD HAVE LIMITS INDICATED.
4. ALL DIMENSIONS ARE OUT TO OUT OF BAR EXCEPT "A" AND "G" ON STANDARD 180 DEGREE AND 135 DEGREE HOOKS.
5. "J" DIMENSION ON 180 DEGREE HOOKS TO BE SHOWN ONLY WHERE NECESSARY TO RESTRICT HOOK SIZE. OTHERWISE, STANDARD HOOKS ARE TO BE USED.
6. "H" DIMENSION ON STIRRUPS TO BE SHOWN ONLY WHEN NECESSARY TO MAINTAIN CLEARANCES.
7. WHERE SLOPE DIFFERS FROM 45 DEGREES, DIMENSIONS "H" AND "K" MUST BE SHOWN.
8. ▲ DENOTES BARS TO BE CUT IN FIELD.
9. ✳ DENOTES ONE EXTRA BAR ADDED FOR TESTING PURPOSES.
10. △ DENOTES TWO EXTRA BARS ADDED FOR TESTING PURPOSES.
11. E IN BAR MARK PREFIX DENOTES EPOXY COATED REINFORCING STEEL.

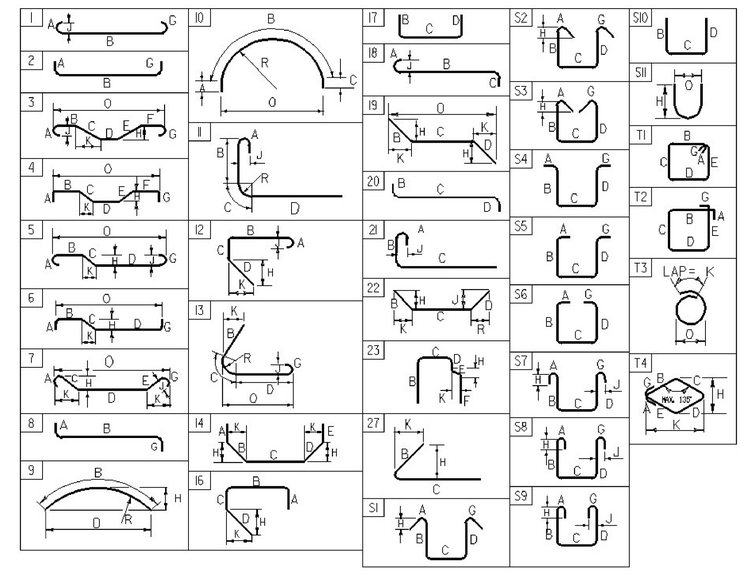

ASTM STANDARD REINFORCING BARS

BAR SIZE DESIGNATION	WEIGHT POUNDS PER FOOT	NOMINAL DIMENSIONS ROUND SECTION DIAMETER INCHES	AREA INCHES2	PERIMETER INCHES
#3	0.376	0.375	0.11	1.178
#4	0.668	0.500	0.20	1.571
#5	1.043	0.625	0.31	1.963
#6	1.502	0.750	0.44	2.356
#7	2.04	0.875	0.60	2.749
#8	2.670	1.000	0.79	3.14
#9	3.400	1.13	1.00	3.54
#10	4.3	1.270	1.27	3.990
#11	5.31	1.410	1.56	4.430
#14	7.65	1.69	2.25	5.32
#18	13.60	2.26	4.00	7.09

~ REINFORCING STEEL CORROSION RESISTANCE LEVEL ~

THE REINFORCING STEEL MARKS IN THIS SCHEDULE INDICATE THE REQUIRED BAR CORROSION RESISTANCE LEVEL. CORROSION RESISTANCE LEVEL IS DENOTED WITH A .2 FOR LEVEL TWO SUFFIX OR .3 FOR LEVEL THREE SUFFIX ,.1 FOR LEVEL ONE IS TO BE OMITTED. THE BAR MATERIAL TYPE AND BAR STEEL GRADE PROVIDED FOR EACH CORROSION LEVEL WILL BE RECORDED ON THE PLAN SET PI SHEET FOR AS-BUILT RECORD PLAN ARCHIVES.

PROJECT NAME: **DERBY**
PROJECT NUMBER: **IM 091-3(49)**

FILE NAME: **s12a274rss.dgn**
PROJECT MANAGER: **C. CARLSON**
DESIGNED BY: **D. PETERSON**
REINFORCING STEEL SCHEDULE (1)

PLOT DATE: **4/7/2017**
DRAWN BY: **G. ROY**
CHECKED BY: **J. LACY**
SHEET 43 OF 73

STATE OF VERMONT
AGENCY OF TRANSPORTATION

REINFORCING STEEL SCHEDULE

ITEM	EACH	SIZE	LENGTH	MARK	TYPE	A	B	C	D	E	F	G	H	J	K	R	O
PIER NO. 1																	
▲	6	5	18'- 6"	1EP501	STR												
▲	6	5	22'- 10"	1EP502	STR												
	5	5	12'- 9"	1EP503	STR												
	5	5	9'- 7"	1EP504	STR												
✳	6	5	5'- 7"	1EP505	STR												
	132	5	3'- 8"	1EP506	S3	0'- 8"	2'- 0"	1'- 0"	---			---	0'- 6"				
	66	5	10'- 10"	1EP507	S3	0'- 8"	3'- 9"	2'- 0"	3'- 9"			0'- 8"	0'- 6"				
	8	5	10'- 8"	1EP508	S3	0'- 8"	3'- 8"	2'- 0"	3'- 8"			0'- 8"	0'- 6"				
	26	5	10'- 0"	1EP509	S3	0'- 8"	3'- 4"	2'- 0"	3'- 4"			0'- 8"	0'- 6"				
	2	5	10'- 6"	1EP510	S3	0'- 8"	3'- 7"	2'- 0"	3'- 7"			0'- 8"	0'- 6"				
	2	5	10'- 0"	1EP511	S3	0'- 8"	3'- 4"	2'- 0"	3'- 4"			0'- 8"	0'- 6"				
	2	5	9'- 6"	1EP512	S3	0'- 8"	3'- 1"	2'- 0"	3'- 1"			0'- 8"	0'- 6"				
	2	5	8'- 10"	1EP513	S3	0'- 8"	2'- 9"	2'- 0"	2'- 9"			0'- 8"	0'- 6"				
	2	5	8'- 4"	1EP514	S3	0'- 8"	2'- 6"	2'- 0"	2'- 6"			0'- 8"	0'- 6"				
	2	5	7'- 10"	1EP515	S3	0'- 8"	2'- 3"	2'- 0"	2'- 3"			0'- 8"	0'- 6"				
	2	5	7'- 4"	1EP516	S3	0'- 8"	2'- 0"	2'- 0"	2'- 0"			0'- 8"	0'- 6"				
	2	5	7'- 0"	1EP517	S3	0'- 8"	1'- 10"	2'- 0"	1'- 10"			0'- 8"	0'- 6"				
	2	5	9'- 10"	1EP518	S3	0'- 8"	3'- 3"	2'- 0"	3'- 3"			0'- 8"	0'- 6"				
	2	5	9'- 4"	1EP519	S3	0'- 8"	3'- 0"	2'- 0"	3'- 0"			0'- 8"	0'- 6"				
	2	5	8'- 10"	1EP520	S3	0'- 8"	2'- 9"	2'- 0"	2'- 9"			0'- 8"	0'- 6"				
	2	5	8'- 4"	1EP521	S3	0'- 8"	2'- 6"	2'- 0"	2'- 6"			0'- 8"	0'- 6"				
	2	5	7'- 8"	1EP522	S3	0'- 8"	2'- 2"	2'- 0"	2'- 2"			0'- 8"	0'- 6"				
	2	5	7'- 2"	1EP523	S3	0'- 8"	1'- 11"	2'- 0"	1'- 11"			0'- 8"	0'- 6"				
	2	5	6'- 8"	1EP524	S3	0'- 8"	1'- 8"	2'- 0"	1'- 8"			0'- 8"	0'- 6"				
	2	5	6'- 4"	1EP525	S3	0'- 8"	1'- 6"	2'- 0"	1'- 6"			0'- 8"	0'- 6"				
✳	9	7	19'- 0"	1EP701	19		4'- 1"	14'- 11"	---				1'- 11"		3'- 7"		
	8	7	23'- 4"	1EP702	19		4'- 1"	19'- 3"	---				1'- 11"		3'- 7"		
✳	40	8	5'- 0"	1EP801	STR												
✳	17	9	19'- 9"	1EP901	1	1'- 3"	18'- 6"					---		1'- 0"			
	16	9	24'- 1"	1EP902	1	1'- 3"	22'- 10"					---		1'- 0"			
PIER NO. 2																	
▲	6	5	18'- 6"	2EP501	STR												
▲	6	5	22'- 10"	2EP502	STR												
	5	5	12'- 9"	2EP503	STR												
✳	6	5	9'- 7"	2EP504	STR												
				2EP505		NOT USED											
	132	5	3'- 8"	2EP506	S3	0'- 8"	2'- 0"	1'- 0"	---			---	0'- 6"				
	66	5	10'- 10"	2EP507	S3	0'- 8"	3'- 9"	2'- 0"	3'- 9"			0'- 8"	0'- 6"				
	34	5	10'- 4"	2EP508	S3	0'- 8"	3'- 6"	2'- 0"	3'- 6"			0'- 8"	0'- 6"				
				2EP509		NOT USED											
	4	5	10'- 2"	2EP510	S3	0'- 8"	3'- 5"	2'- 0"	3'- 5"			0'- 8"	0'- 6"				
	4	5	9'- 8"	2EP511	S3	0'- 8"	3'- 2"	2'- 0"	3'- 2"			0'- 8"	0'- 6"				
	4	5	9'- 2"	2EP512	S3	0'- 8"	2'- 11"	2'- 0"	2'- 11"			0'- 8"	0'- 6"				
	4	5	8'- 8"	2EP513	S3	0'- 8"	2'- 8"	2'- 0"	2'- 8"			0'- 8"	0'- 6"				
	4	5	8'- 0"	2EP514	S3	0'- 8"	2'- 4"	2'- 0"	2'- 4"			0'- 8"	0'- 6"				
	4	5	7'- 6"	2EP515	S3	0'- 8"	2'- 1"	2'- 0"	2'- 1"			0'- 8"	0'- 6"				
	4	5	7'- 0"	2EP516	S3	0'- 8"	1'- 10"	2'- 0"	1'- 10"			0'- 8"	0'- 6"				
	4	5	6'- 8"	2EP517	S3	0'- 8"	1'- 8"	2'- 0"	1'- 8"			0'- 8"	0'- 6"				
✳	9	7	19'- 0"	2EP701	19		4'- 1"	14'- 11"	---				1'- 11"		3'- 7"		
	8	7	23'- 4"	2EP702	19		4'- 1"	19'- 3"	---				1'- 11"		3'- 7"		
✳	40	8	5'- 0"	2EP801	STR												
✳	17	9	19'- 9"	2EP901	1	1'- 3"	18'- 6"					---		1'- 0"			
	16	9	24'- 1"	2EP902	1	1'- 3"	22'- 10"					---		1'- 0"			

ITEM	EACH	SIZE	LENGTH	MARK	TYPE	A	B	C	D	E	F	G	H	J	K	R	O
PIER NO. 3																	
▲	6	5	18'- 6"	3EP501	STR												
▲	6	5	22'- 10"	3EP502	STR												
✳	6	5	5'- 3"	3EP503	STR												
	5	5	9'- 7"	3EP504	STR												
	5	5	12'- 5"	3EP505	STR												
	132	5	3'- 8"	3EP506	S3	0'- 8"	2'- 0"	1'- 0"	---			---	0'- 6"				
	48	5	11'- 2"	3EP507	S3	0'- 8"	3'- 11"	2'- 0"	3'- 11"			0'- 8"	0'- 6"				
	26	5	10'- 6"	3EP508	S3	0'- 8"	3'- 7"	2'- 0"	3'- 7"			0'- 8"	0'- 6"				
	26	5	10'- 10"	3EP509	S3	0'- 8"	3'- 9"	2'- 0"	3'- 9"			0'- 8"	0'- 6"				
	2	5	10'- 4"	3EP510	S3	0'- 8"	3'- 6"	2'- 0"	3'- 6"			0'- 8"	0'- 6"				
	2	5	9'- 10"	3EP511	S3	0'- 8"	3'- 3"	2'- 0"	3'- 3"			0'- 8"	0'- 6"				
	2	5	9'- 4"	3EP512	S3	0'- 8"	3'- 0"	2'- 0"	3'- 0"			0'- 8"	0'- 6"				
	2	5	8'- 10"	3EP513	S3	0'- 8"	2'- 9"	2'- 0"	2'- 9"			0'- 8"	0'- 6"				
	2	5	8'- 2"	3EP514	S3	0'- 8"	2'- 5"	2'- 0"	2'- 5"			0'- 8"	0'- 6"				
	2	5	7'- 8"	3EP515	S3	0'- 8"	2'- 2"	2'- 0"	2'- 2"			0'- 8"	0'- 6"				
	2	5	7'- 2"	3EP516	S3	0'- 8"	1'- 11"	2'- 0"	1'- 11"			0'- 8"	0'- 6"				
	2	5	6'- 10"	3EP517	S3	0'- 8"	1'- 9"	2'- 0"	1'- 9"			0'- 8"	0'- 6"				
	2	5	10'- 8"	3EP518	S3	0'- 8"	3'- 8"	2'- 0"	3'- 8"			0'- 8"	0'- 6"				
	2	5	10'- 2"	3EP519	S3	0'- 8"	3'- 5"	2'- 0"	3'- 5"			0'- 8"	0'- 6"				
	2	5	9'- 8"	3EP520	S3	0'- 8"	3'- 2"	2'- 0"	3'- 2"			0'- 8"	0'- 6"				
	2	5	9'- 2"	3EP521	S3	0'- 8"	2'- 11"	2'- 0"	2'- 11"			0'- 8"	0'- 6"				
	2	5	8'- 6"	3EP522	S3	0'- 8"	2'- 7"	2'- 0"	2'- 7"			0'- 8"	0'- 6"				
	2	5	8'- 0"	3EP523	S3	0'- 8"	2'- 4"	2'- 0"	2'- 4"			0'- 8"	0'- 6"				
	2	5	7'- 6"	3EP524	S3	0'- 8"	2'- 1"	2'- 0"	2'- 1"			0'- 8"	0'- 6"				
	2	5	7'- 2"	3EP525	S3	0'- 8"	1'- 11"	2'- 0"	1'- 11"			0'- 8"	0'- 6"				
✳	9	7	19'- 0"	3EP701	19		4'- 1"	14'- 11"	---				1'- 11"		3'- 7"		
	8	7	23'- 4"	3EP702	19		4'- 1"	19'- 3"	---				1'- 11"		3'- 7"		
✳	40	8	5'- 0"	3EP801	STR												
✳	17	9	19'- 9"	3EP901	1	1'- 3"	18'- 6"					---		1'- 0"			
	16	9	24'- 1"	3EP902	1	1'- 3"	22'- 10"					---		1'- 0"			

~ NOTES ~

1. UNLESS OTHERWISE DESIGNATED, ALL BAR REINFORCEMENT FOR CONCRETE IN SIZES UP TO AND INCLUDING NO. 18 SHALL CONFORM TO THE REQUIREMENTS OF THE "SPECIFICATIONS FOR DEFORMED BILLET-STEEL BARS FOR CONCRETE REINFORCEMENT", AASHTO M 31 (ASTM A 615-SI). ALL BARS SHALL BE GRADE 60, UNLESS OTHERWISE DESIGNATED.
2. FOR TYPICAL BENDING DETAILS, RECOMMENDED PIN DIAMETER "D" OF BENDS AND HOOKS, AND OTHER STANDARD PRACTICE, SEE CURRENT CONCRETE REINFORCING STEEL INSTITUTE "MANUAL OF STANDARD PRACTICE".
3. BARS WHICH REQUIRE MORE ACCURATE BENDING THAN STANDARD PRACTICES SHOULD HAVE LIMITS INDICATED.
4. ALL DIMENSIONS ARE OUT TO OUT OF BAR EXCEPT "A" AND "G" ON STANDARD 180 DEGREE AND 135 DEGREE HOOKS.
5. "J" DIMENSION ON 180 DEGREE HOOKS TO BE SHOWN ONLY WHERE NECESSARY TO RESTRICT HOOK SIZE. OTHERWISE, STANDARD HOOKS ARE TO BE USED.
6. "H" DIMENSION ON STIRRUPS TO BE SHOWN ONLY WHEN NECESSARY TO MAINTAIN CLEARANCES.
7. WHERE SLOPE DIFFERS FROM 45 DEGREES, DIMENSIONS "H" AND "K" MUST BE SHOWN.
8. ▲ DENOTES BARS TO BE CUT IN FIELD.
9. ✳ DENOTES ONE EXTRA BAR ADDED FOR TESTING PURPOSES.
10. △ DENOTES TWO EXTRA BARS ADDED FOR TESTING PURPOSES.
11. E IN BAR MARK PREFIX DENOTES EPOXY COATED REINFORCING STEEL.

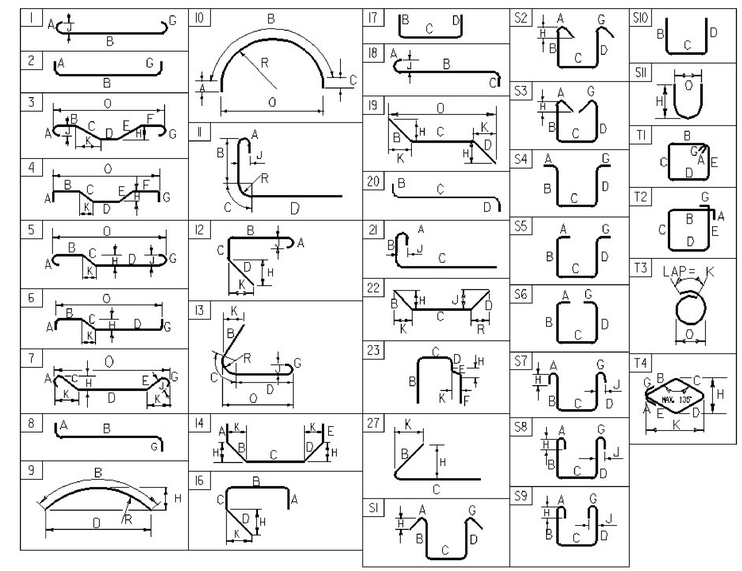

ASTM STANDARD REINFORCING BARS

BAR SIZE DESIGNATION	WEIGHT POUNDS PER FOOT	NOMINAL DIMENSIONS ROUND SECTION DIAMETER INCHES	AREA INCHES2	PERIMETER INCHES
#3	0.376	0.375	0.11	1.178
#4	0.668	0.500	0.20	1.571
#5	1.043	0.625	0.31	1.963
#6	1.502	0.750	0.44	2.356
#7	2.04	0.875	0.60	2.749
#8	2.670	1.000	0.79	3.14
#9	3.400	1.13	1.00	3.54
#10	4.3	1.270	1.27	3.990
#11	5.31	1.410	1.56	4.430
#14	7.65	1.69	2.25	5.32
#18	13.60	2.26	4.00	7.09

~ REINFORCING STEEL CORROSION RESISTANCE LEVEL ~

THE REINFORCING STEEL MARKS IN THIS SCHEDULE INDICATE THE REQUIRED BAR CORROSION RESISTANCE LEVEL. CORROSION RESISTANCE LEVEL IS DENOTED WITH A .2 FOR LEVEL TWO SUFFIX OR .3 FOR LEVEL THREE SUFFIX , .1 FOR LEVEL ONE IS TO BE OMITTED. THE BAR MATERIAL TYPE AND BAR STEEL GRADE PROVIDED FOR EACH CORROSION LEVEL WILL BE RECORDED ON THE PLAN SET PI SHEET FOR AS-BUILT RECORD PLAN ARCHIVES.

PROJECT NAME: **DERBY**
PROJECT NUMBER: **IM 091-3(49)**

FILE NAME: **s12a274rss.dgn**
PROJECT MANAGER: **C. CARLSON**
DESIGNED BY: **D. PETERSON**
REINFORCING STEEL SCHEDULE (2)

PLOT DATE: **4/7/2017**
DRAWN BY: **G. ROY**
CHECKED BY: **J. LACY**
SHEET 44 OF 73

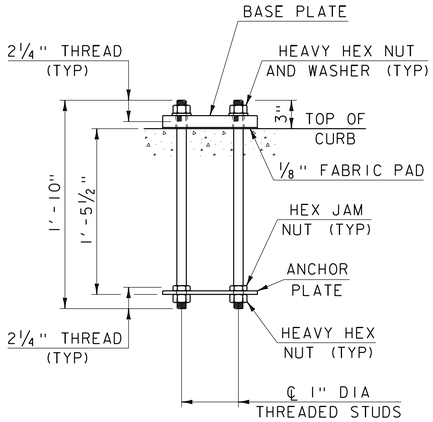

RAILING POST ANCHORAGE

SCALE: 1½" = 1'-0"

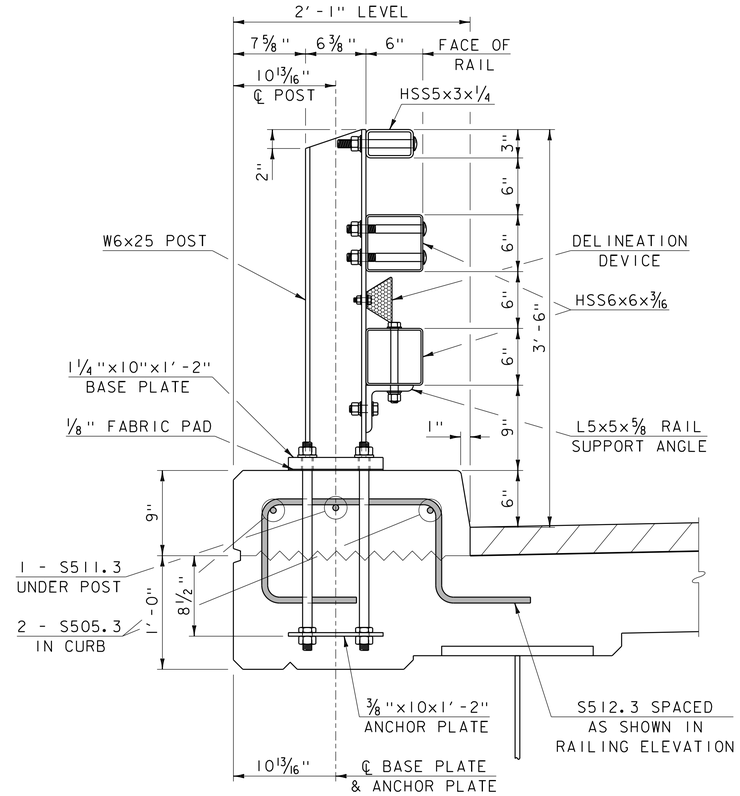

RAILING SECTION

SCALE: 1½" = 1'-0"

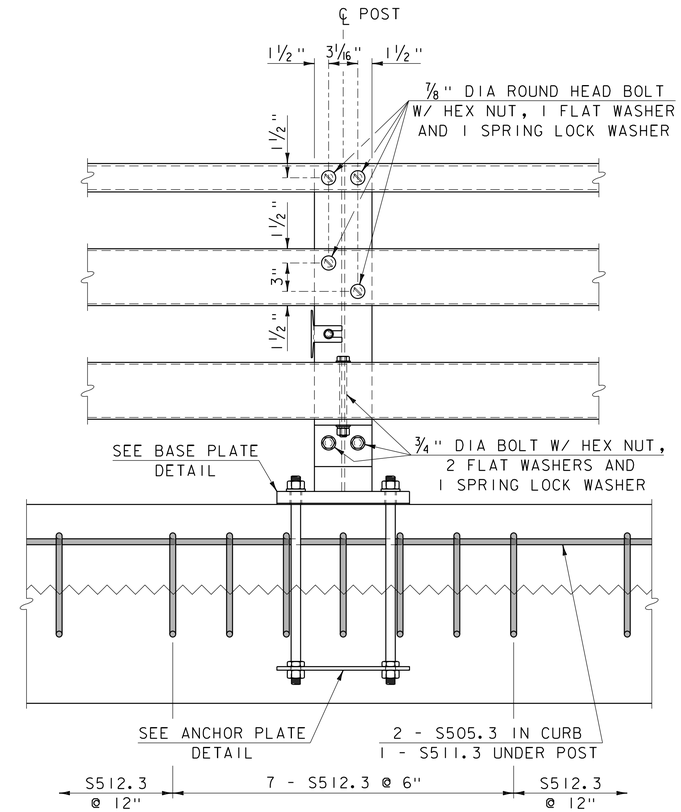

RAILING ELEVATION

SCALE: 1½" = 1'-0"

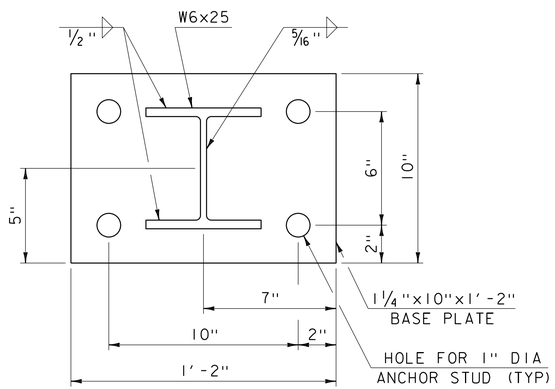

BASE PLATE DETAIL

SCALE: 3" = 1'-0"

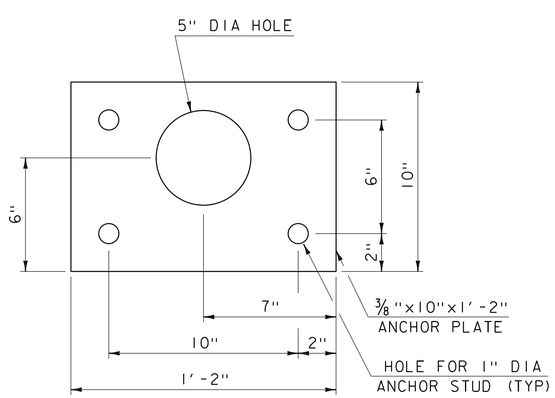

ANCHOR PLATE DETAIL

SCALE: 3" = 1'-0"

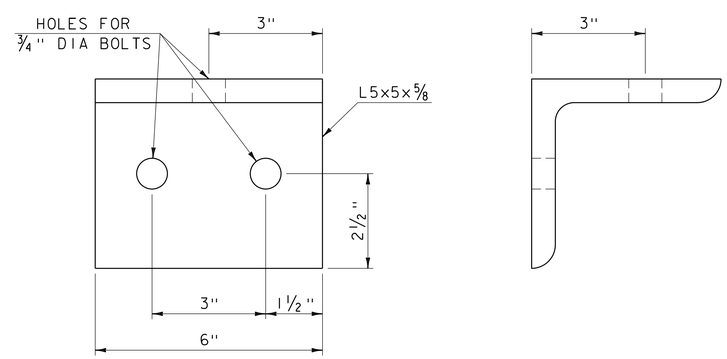

ELEVATION SECTION

RAIL SUPPORT ANGLE DETAIL

SCALE: 6" = 1'-0"

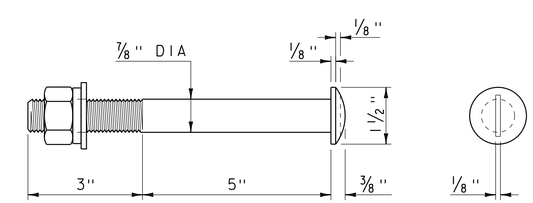

ROUND HEAD BOLT DETAIL

SCALE: 6" = 1'-0"
A449 (TYPE 1)

PROJECT NAME: DERBY	
PROJECT NUMBER: IM 091-3(49)	
FILE NAME: s12a274sup.dgn	PLOT DATE: 02-JUN-2017
PROJECT LEADER: C. CARLSON	DRAWN BY: G. ROY
DESIGNED BY: D. PETERSON	CHECKED BY: D. PETERSON
BRIDGE RAILING DETAILS (1)	SHEET 45 OF 73

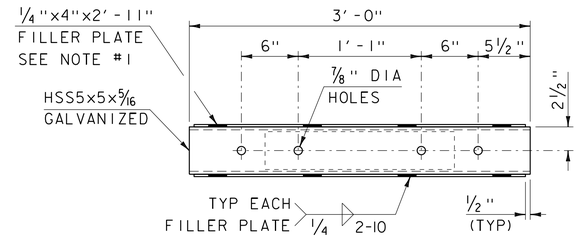

TOP VIEW

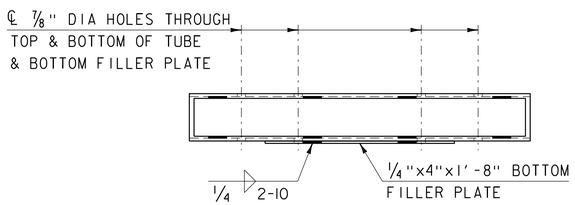

SIDE VIEW
EXPANSION SPLICE TUBE

SCALE: 1 1/2" = 1'-0"

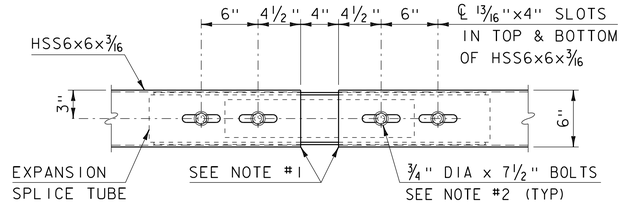

TOP VIEW

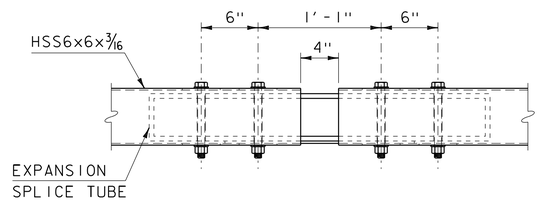

SIDE VIEW
EXPANSION SPLICE TUBE ASSEMBLY

SCALE: 1 1/2" = 1'-0"

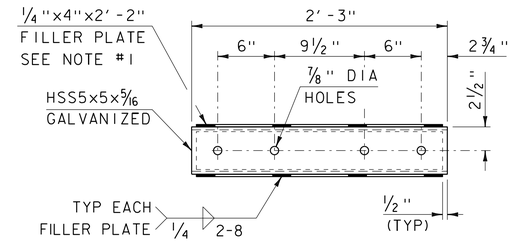

TOP VIEW

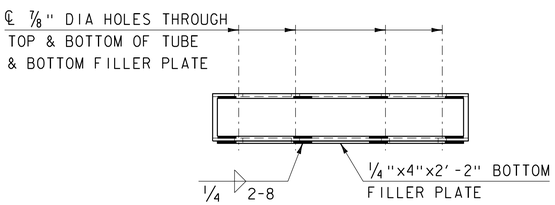

SIDE VIEW
FIXED SPLICE TUBE

SCALE: 1 1/2" = 1'-0"

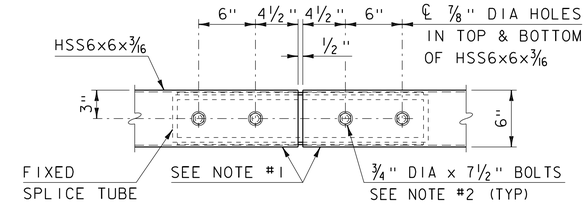

TOP VIEW

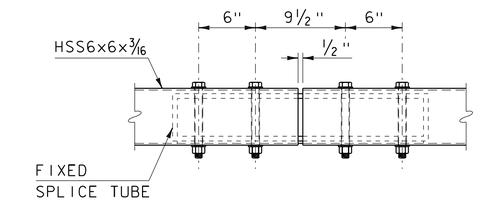

SIDE VIEW
FIXED SPLICE TUBE ASSEMBLY

SCALE: 1 1/2" = 1'-0"

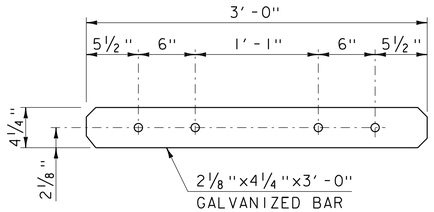

TOP VIEW

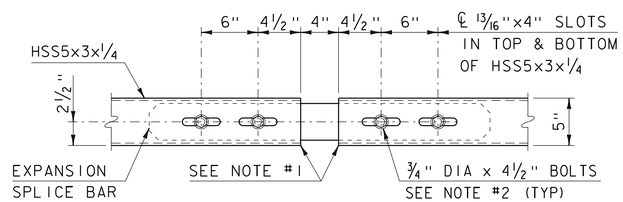

TOP VIEW

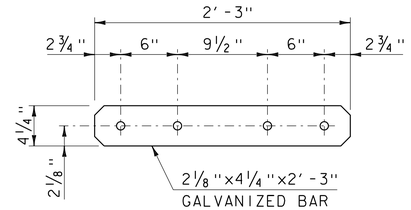

TOP VIEW

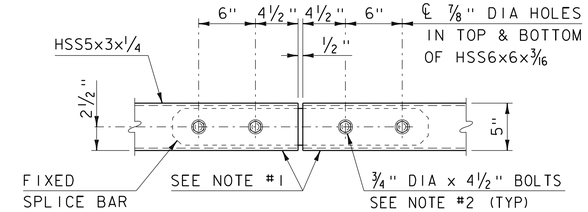

TOP VIEW

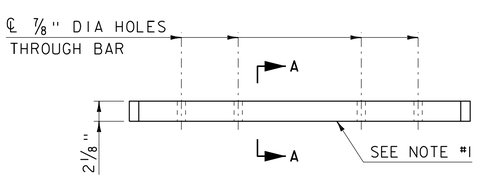

SIDE VIEW
EXPANSION SPLICE BAR

SCALE: 1 1/2" = 1'-0"

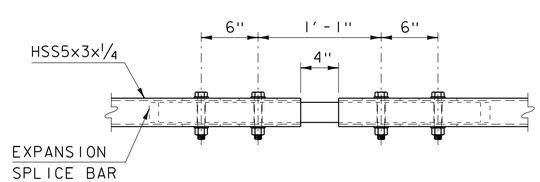

SIDE VIEW
EXPANSION SPLICE BAR ASSEMBLY

SCALE: 1 1/2" = 1'-0"

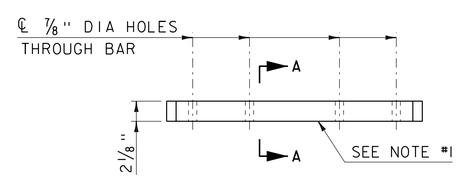

SIDE VIEW
FIXED SPLICE BAR

SCALE: 1 1/2" = 1'-0"

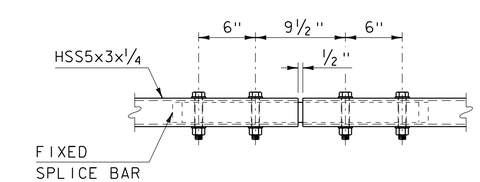

SIDE VIEW
FIXED SPLICE BAR ASSEMBLY

SCALE: 1 1/2" = 1'-0"

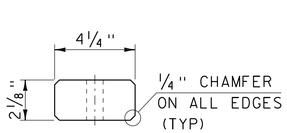

SECTION A-A

SCALE: 3" = 1'-0"

NOTES:

1. PROTRUSIONS CAUSED BY WELDING OR GALVANIZING ARE NOT PERMITTED ON THE ADJOINING SURFACES OF THE BOX BEAM RAILS, SPLICE TUBES AND FILL PLATES.
2. FOUR 3/4" DIAMETER FULLY THREADED BOLTS WITH TWO PLAIN HARDENED (F436) WASHERS AND A HEAVY HEX NUT ON EACH BOLT. NUT TO BE FINGER TIGHT AND THE FIRST THREAD BELOW THE NUT TO BE BURRED TO PREVENT DISLODGING. FOUR BOLTS AT EACH SPLICE.

PROJECT NAME: DERBY	
PROJECT NUMBER: IM 091-3(49)	
FILE NAME: s12a274sup.dgn	PLOT DATE: 02-JUN-2017
PROJECT LEADER: C. CARLSON	DRAWN BY: G. ROY
DESIGNED BY: D. PETERSON	CHECKED BY: D. PETERSON
BRIDGE RAILING DETAILS (2)	SHEET 46 OF 73

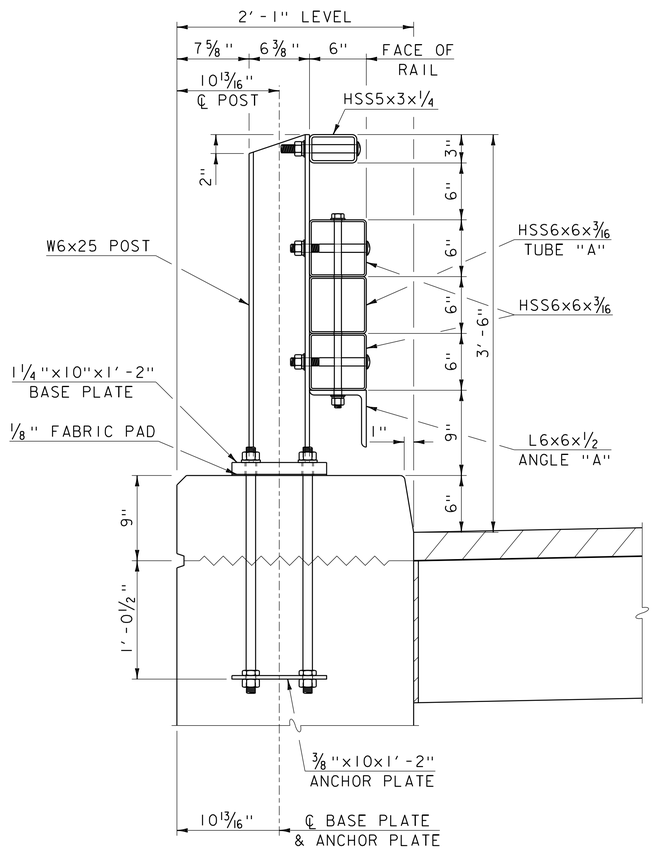

END RAILING SECTION

SCALE: 1 1/2" = 1'-0"

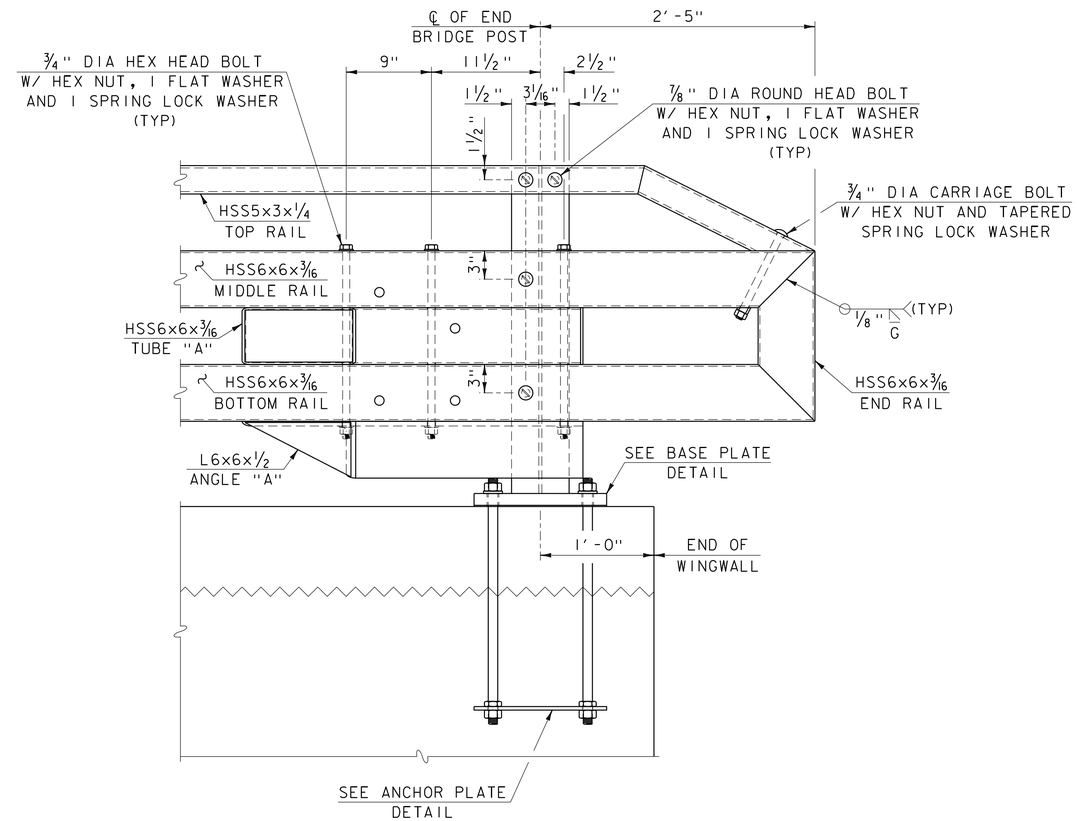

END RAILING ELEVATION

SCALE: 1 1/2" = 1'-0"

PROJECT NAME: DERBY	
PROJECT NUMBER: IM 091-3(49)	
FILE NAME: s12a274sup.dgn	PLOT DATE: 02-JUN-2017
PROJECT LEADER: C. CARLSON	DRAWN BY: G. ROY
DESIGNED BY: D. PETERSON	CHECKED BY: D. PETERSON
BRIDGE RAILING DETAILS (3)	SHEET 47 OF 73

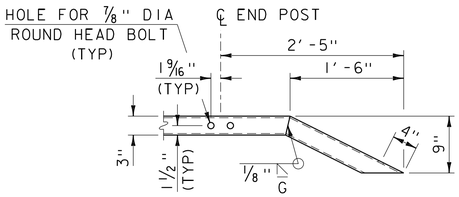

TOP RAIL ELEVATION

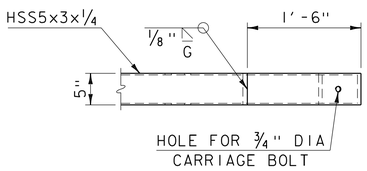

TOP RAIL PLAN END DETAIL

SCALE: 1" = 1'-0"

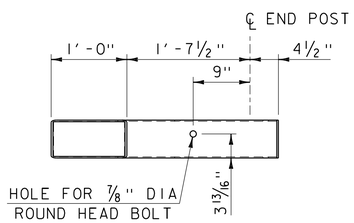

TUBE "A" ELEVATION

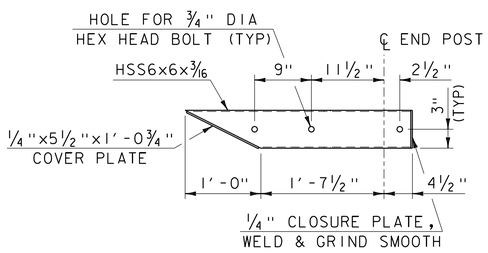

TUBE "A" PLAN

SCALE: 1" = 1'-0"

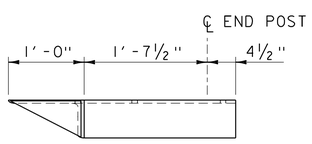

ANGLE "A" ELEVATION

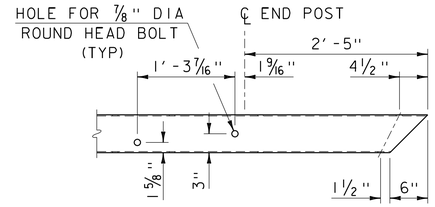

MIDDLE RAIL ELEVATION

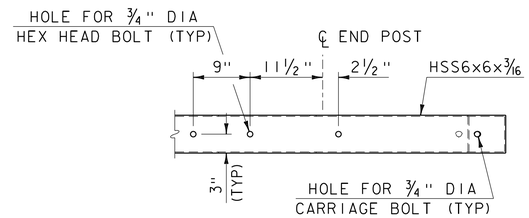

MIDDLE RAIL PLAN END DETAIL

SCALE: 1" = 1'-0"

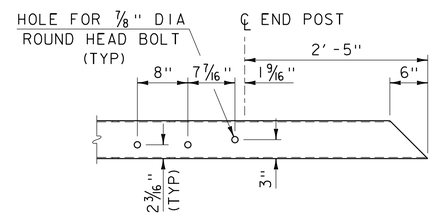

BOTTOM RAIL ELEVATION

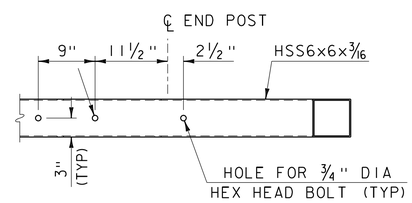

BOTTOM RAIL PLAN END DETAIL

SCALE: 1" = 1'-0"

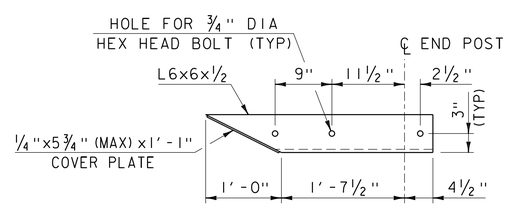

ANGLE "A" PLAN

SCALE: 1" = 1'-0"

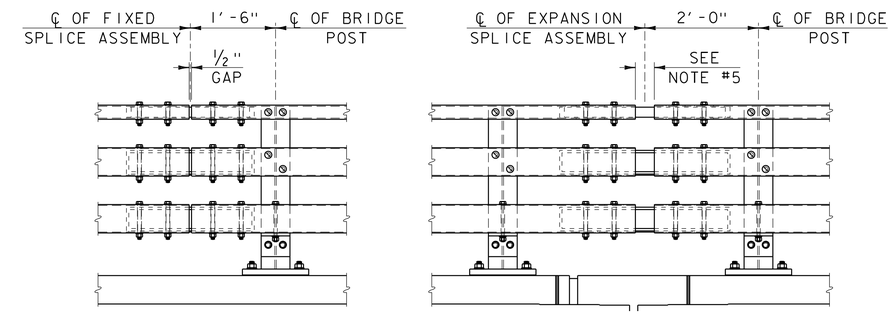

FIXED SPLICE

EXPANSION SPLICE

RAILING SPLICE ELEVATION

SCALE: 3/4" = 1'-0"

A RAILING EXPNASION SPLICE IS REQUIRED IN ANY POST SPACING THAT CONTAINS A SUPERSTRUCTURE EXPANSION JOINT.

NOTES:

1. ALL WORK AND MATERIALS SHALL CONFORM TO SECTION 525.
2. PRIOR TO GALVANIZING, GRIND ALL EDGES TO A MINIMUM RADIUS OF 1/16".
3. ALL POSTS SHALL BE SET NORMAL TO GRADE. THE MAXIMUM CENTER TO CENTER SPACING OF BRIDGE RAIL POSTS IS 8'-3".
4. SECTIONS OF RAIL TUBE SHALL BE ATTACHED TO A MINIMUM OF TWO BRIDGE POSTS AND PREFERABLY TO AT LEAST 4 POSTS.
5. RAIL TUBE EXPANSION JOINTS SHALL BE PROVIDED IN ANY RAIL BAY SPANNING THE END OF AN INTEGRAL ABUTMENT BRIDGE AND AT ALL SUPERSTRUCTURE EXPANSION JOINTS. EXPANSION JOINT WIDTH SHALL BE 4" @ 68°F AND WILL BE ADJUSTED IN THE FIELD BY THE ENGINEER FOR OTHER TEMPERATURES.
6. HOLES IN RAILS FOR TUBE ATTACHMENT MAY BE FIELD-DRILLED. HOLES SHALL BE COATED WITH AN APPROVED ZINC-RICH PAINT PRIOR TO INSTALLATION.
7. BOLTS SHALL BE TORQUED SNUG TIGHT (APPROXIMATELY 100 FT-LB).
8. SEE STANDARD DRAWING G-1 FOR DETAILS OF DELINEATORS. A DELINEATOR SHALL BE INSTALLED AT 30 FOOT SPACING OR THE NEAREST POST. WHITE IS TO BE INSTALLED ON THE DRIVER'S RIGHT. FOR ONE WAY BRIDGES, YELLOW IS TO BE INSTALLED ON THE DRIVER'S LEFT. PAYMENT SHALL BE INCIDENTAL TO OTHER ITEMS.
9. ANY BENDING OF RAIL SHALL BE DONE AT THE FABRICATION PLANT ACCORDING TO A PROCEDURE PROVIDED BY THE FABRICATOR.
10. THE MINIMUM DISTANCE FROM THE POST TO AN EXPANSION JOINT SHALL BE DETERMINED BY THE MINIMUM EDGE DISTANCE OF 5" FROM ANY ANCHOR STUD TO THE END OF THE SLAB OR TO THE EXPANSION JOINT RECESS POUR IF ONE IS USED.
11. THIS RAILING MEETS THE REQUIREMENTS FOR A TL-4 SERVICE LEVEL.

PROJECT NAME: DERBY	
PROJECT NUMBER: IM 091-3(49)	
FILE NAME: s12a274sup.dgn	PLOT DATE: 02-JUN-2017
PROJECT LEADER: C. CARLSON	DRAWN BY: G. ROY
DESIGNED BY: D. PETERSON	CHECKED BY: D. PETERSON
BRIDGE RAILING DETAILS (4)	SHEET 48 OF 73

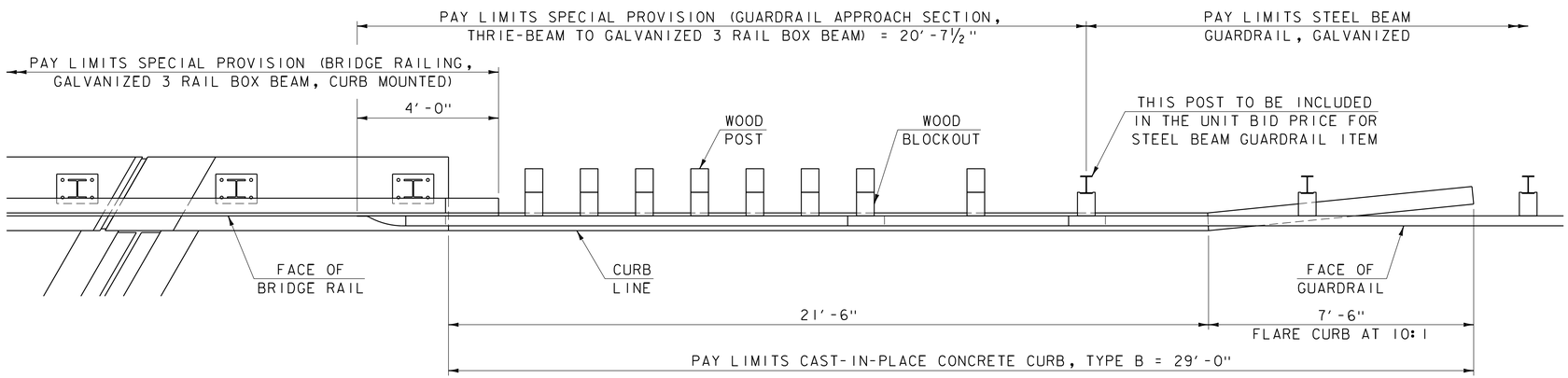

RAILING TRANSITION PLAN

SCALE: ½" = 1'-0"

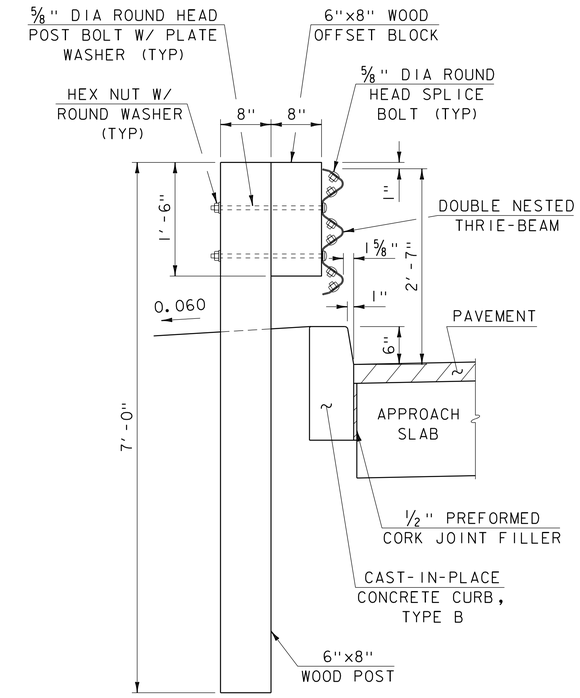

WOOD POST AND THRIE-BEAM RAIL ASSEMBLY

SCALE: 1" = 1'-0"

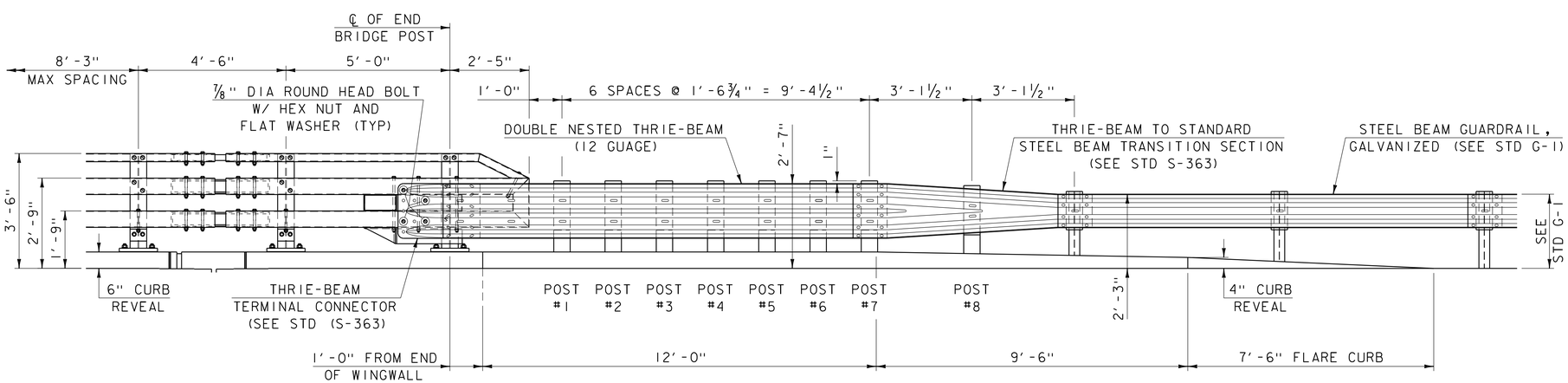

RAILING TRANSITION ELEVATION

SCALE: ½" = 1'-0"

PROJECT NAME: DERBY	
PROJECT NUMBER: IM 091-3(49)	
FILE NAME: sl2a274sup.dgn	PLOT DATE: 02-JUN-2017
PROJECT LEADER: C. CARLSON	DRAWN BY: G. ROY
DESIGNED BY: D. PETERSON	CHECKED BY: D. PETERSON
THRIE-BEAM TO BOX BEAM APPROACH RAILING DETAILS	SHEET 49 OF 73

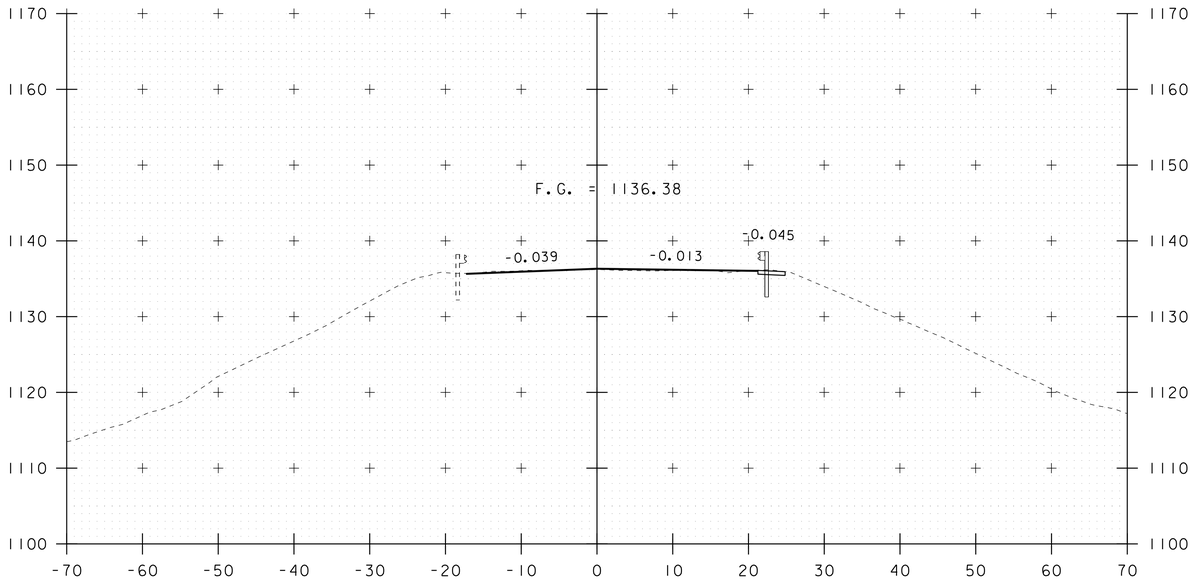

148+75

STA 148+75.00
BEGIN APPROACH
MATCH EXISTING

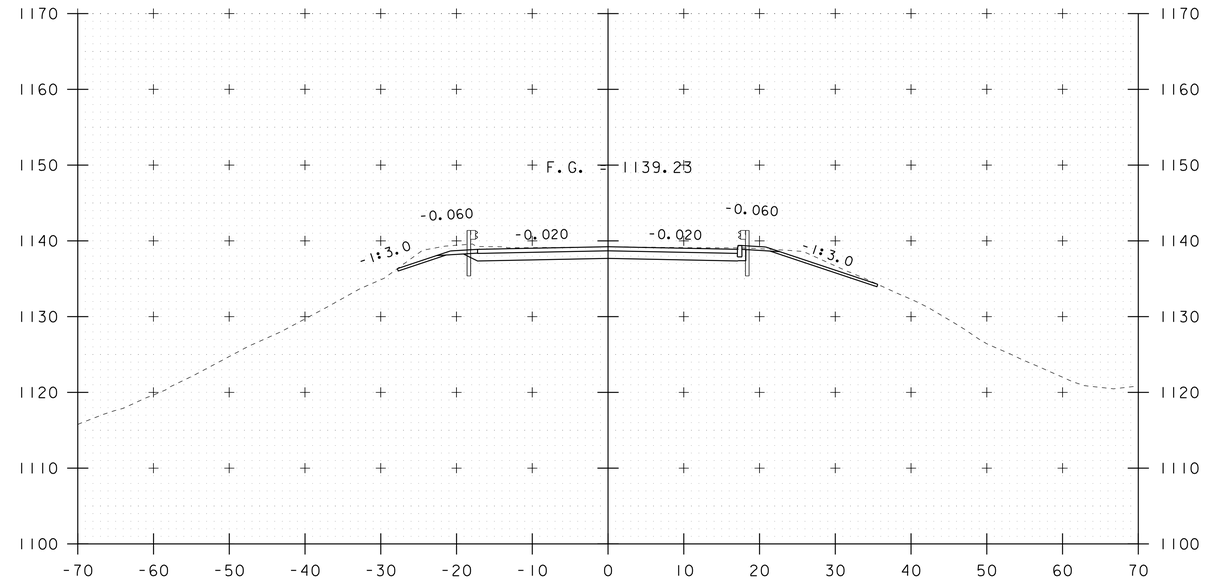

149+25

STA 149+25.00
BEGIN PROJECT

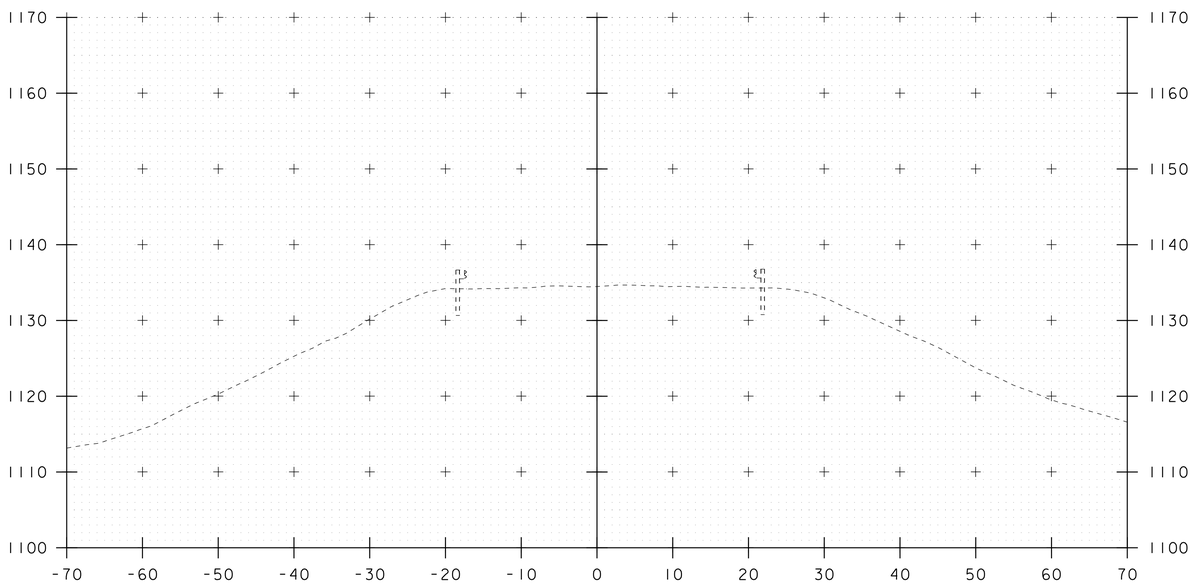

148+50

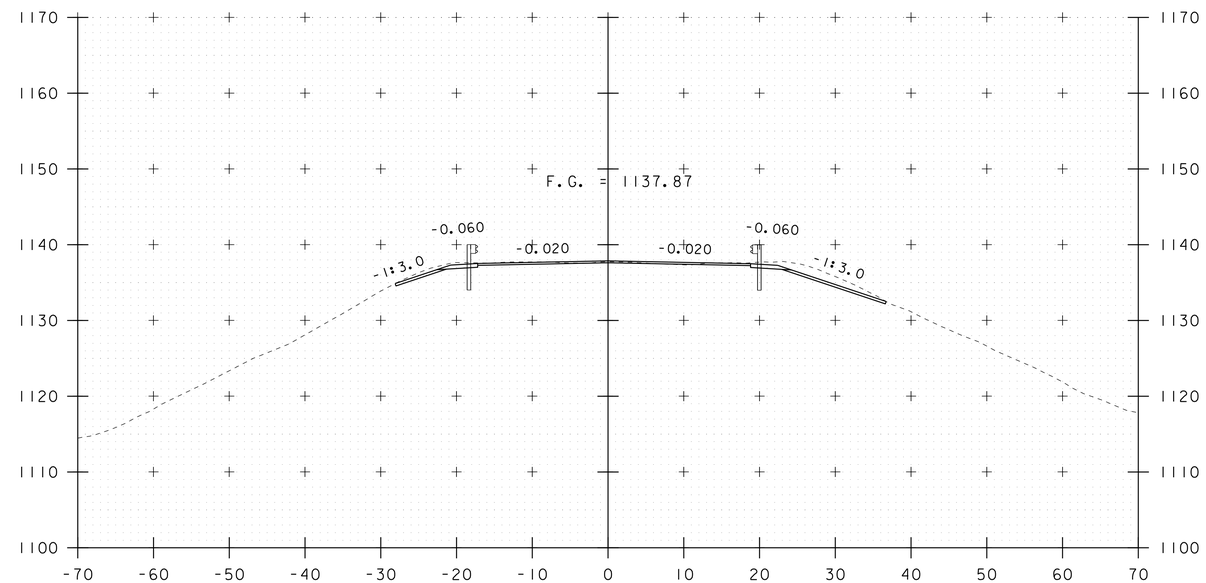

149+00

10 0 10
SCALE: 1" = 10'-0"

STA. 148+50 TO STA. 149+25

PROJECT NAME: DERBY	
PROJECT NUMBER: IM 091-3(49)	
FILE NAME: s12a274xsl.dgn	PLOT DATE: 02-JUN-2017
PROJECT LEADER: C. CARLSON	DRAWN BY: G. ROY
DESIGNED BY: D. PETERSON	CHECKED BY: J. LACY
TH 1 CROSS SECTIONS (1)	SHEET 50 OF 73

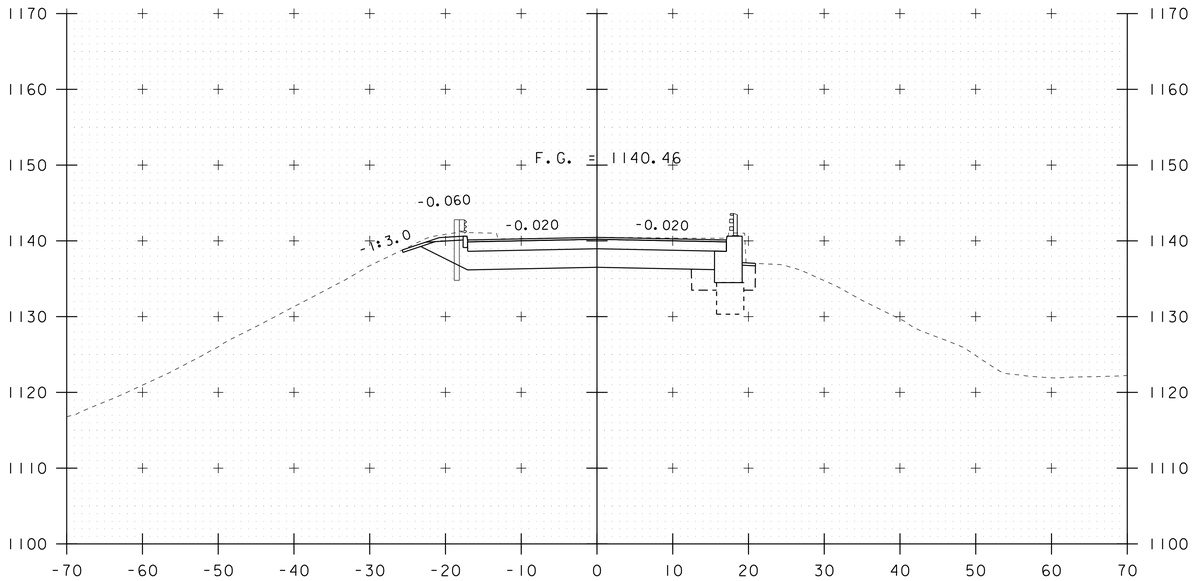

149+50

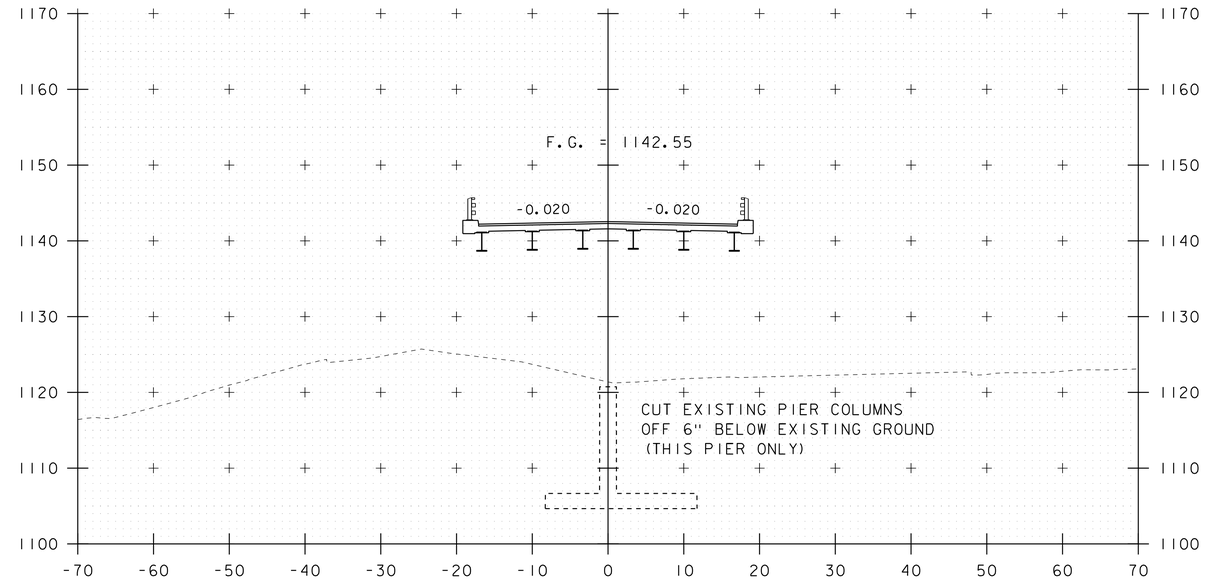

150+00

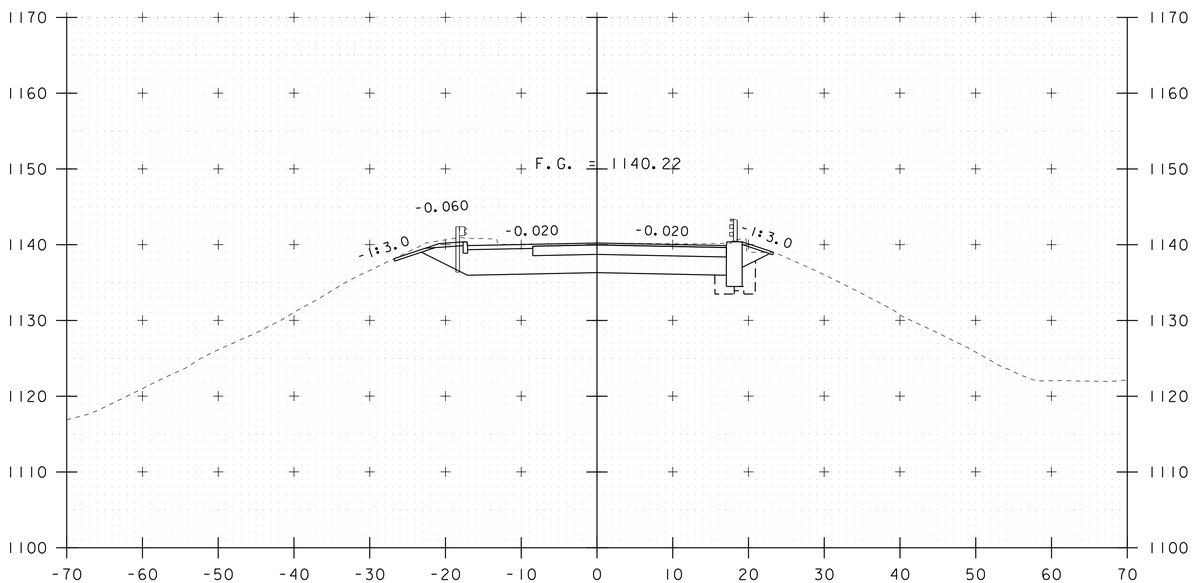

149+45

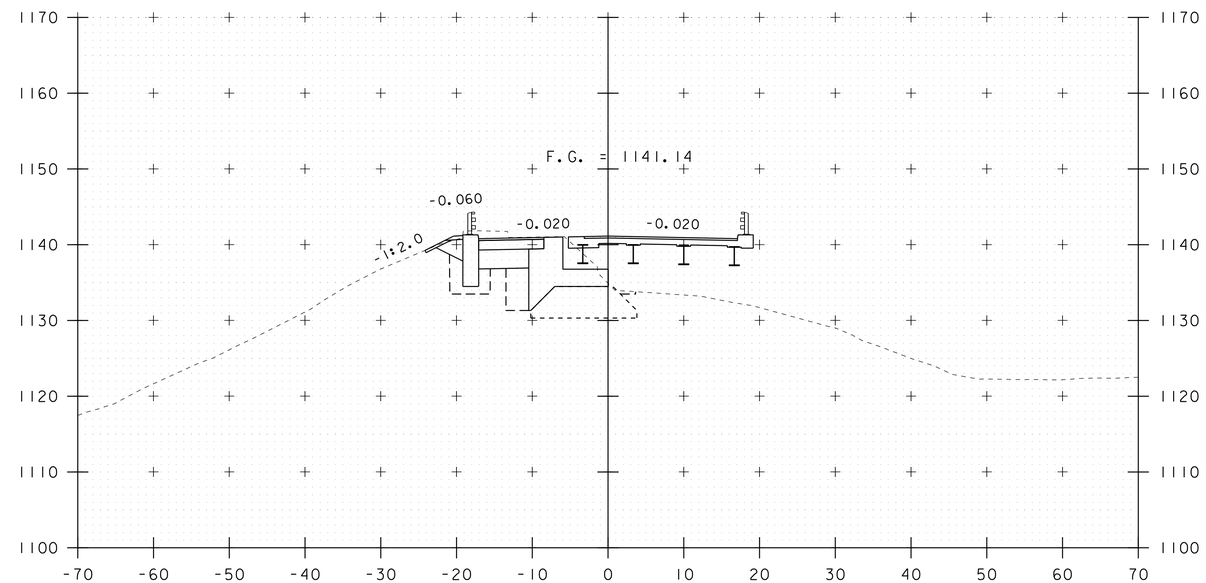

149+65

STA 149+60.11
BEGIN BRIDGE

10 0 10
SCALE: 1" = 10'-0"

STA. 149+45 TO STA. 150+00

PROJECT NAME: DERBY	
PROJECT NUMBER: IM 091-3(49)	
FILE NAME: s12a274xsl.dgn	PLOT DATE: 02-JUN-2017
PROJECT LEADER: C. CARLSON	DRAWN BY: G. ROY
DESIGNED BY: D. PETERSON	CHECKED BY: J. LACY
TH 1 CROSS SECTIONS (2)	SHEET 51 OF 73

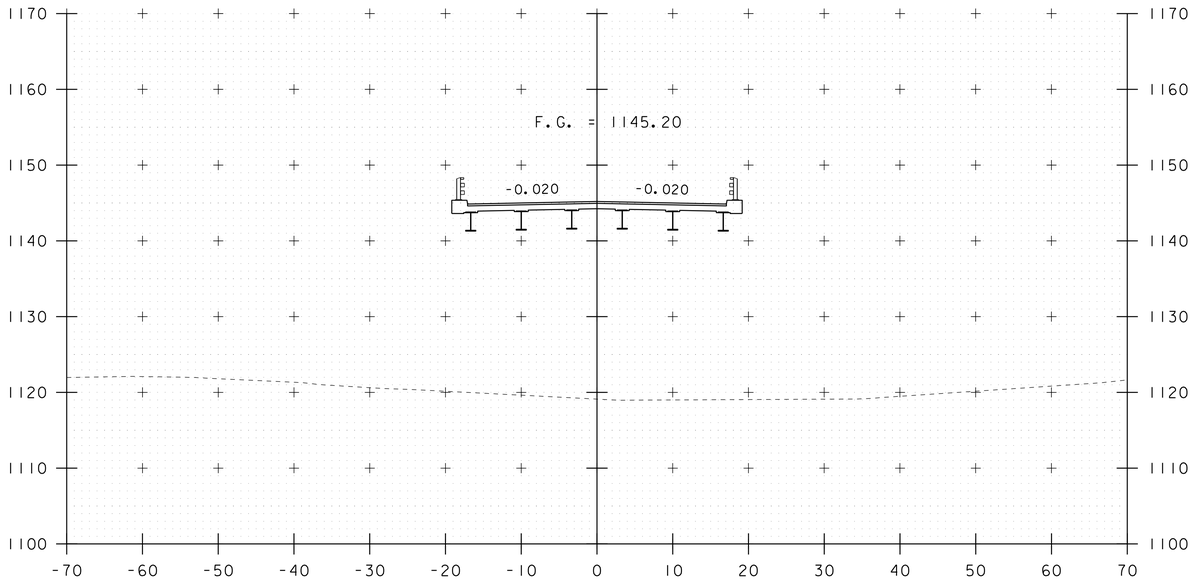

151+00

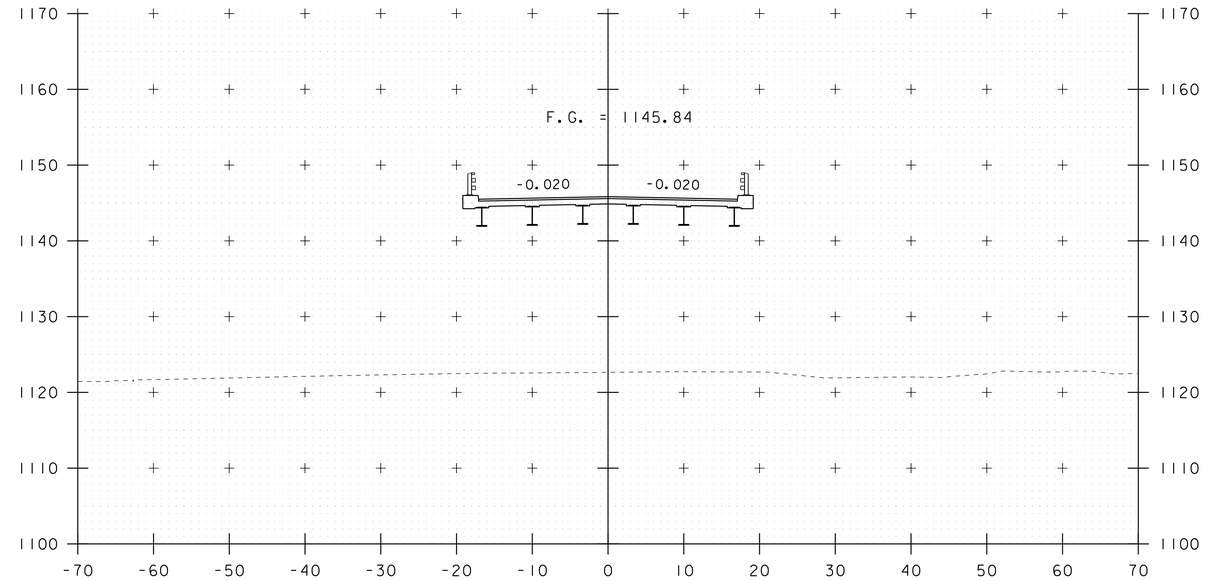

152+00

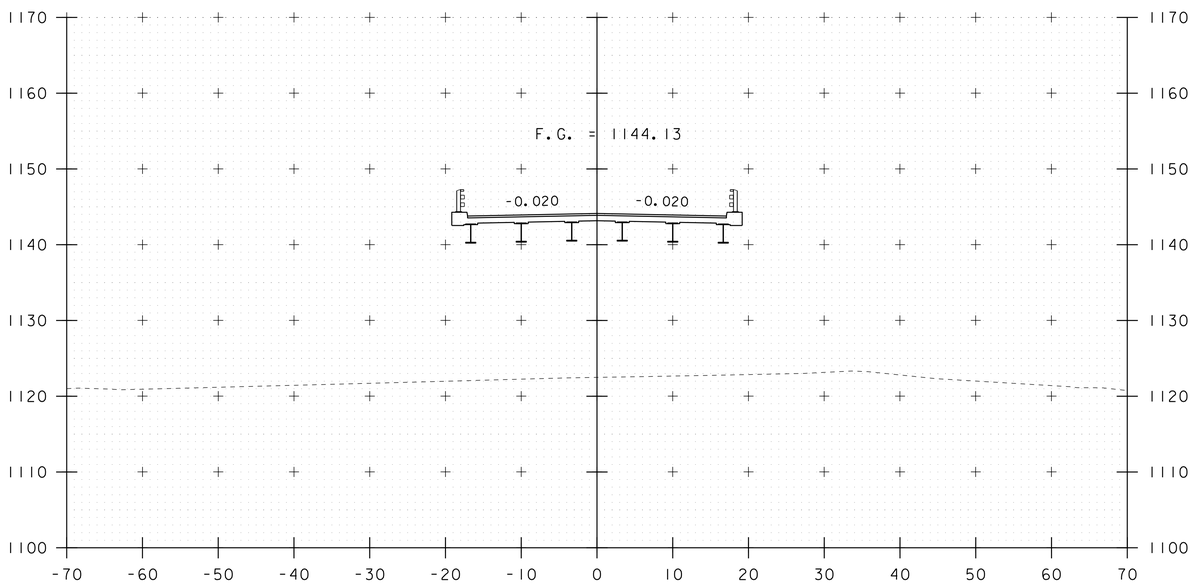

150+50

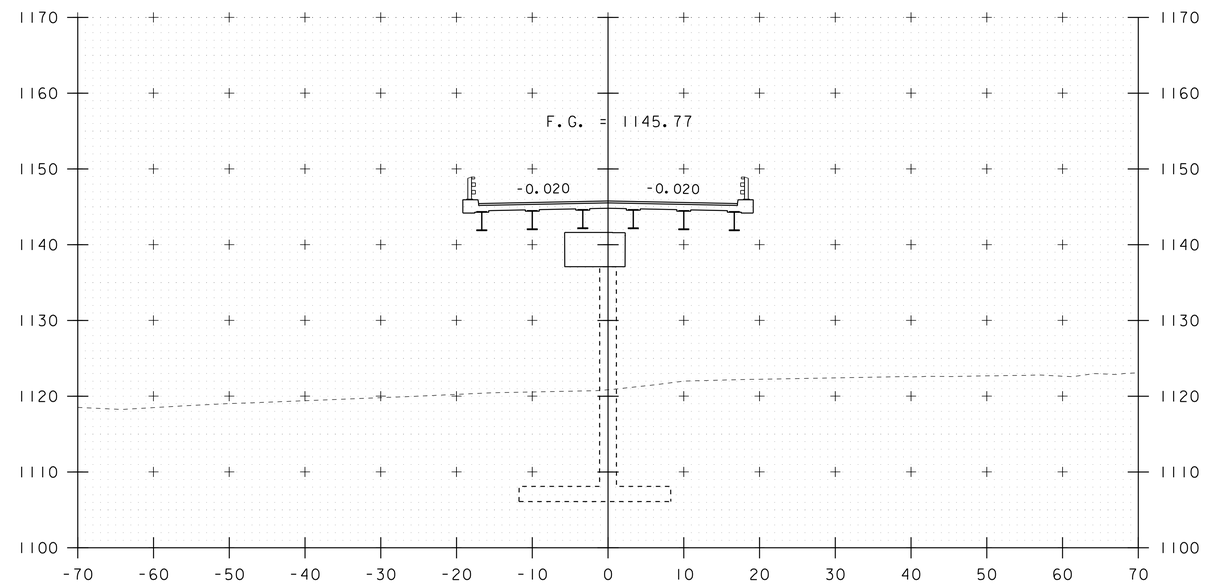

151+50

10 0 10

SCALE: 1" = 10'-0"

STA. 150+50 TO STA. 152+00

PROJECT NAME: DERBY	
PROJECT NUMBER: IM 091-3(49)	
FILE NAME: s12a274xs1.dgn	PLOT DATE: 02-JUN-2017
PROJECT LEADER: C. CARLSON	DRAWN BY: G. ROY
DESIGNED BY: D. PETERSON	CHECKED BY: J. LACY
TH 1 CROSS SECTIONS (3)	SHEET 52 OF 73

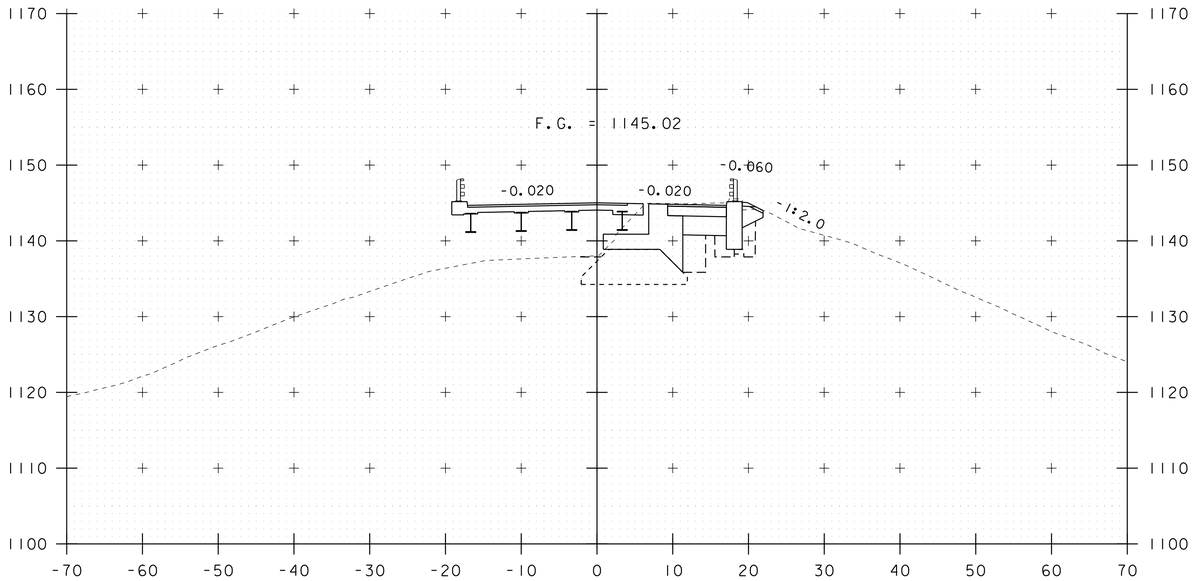

152+73

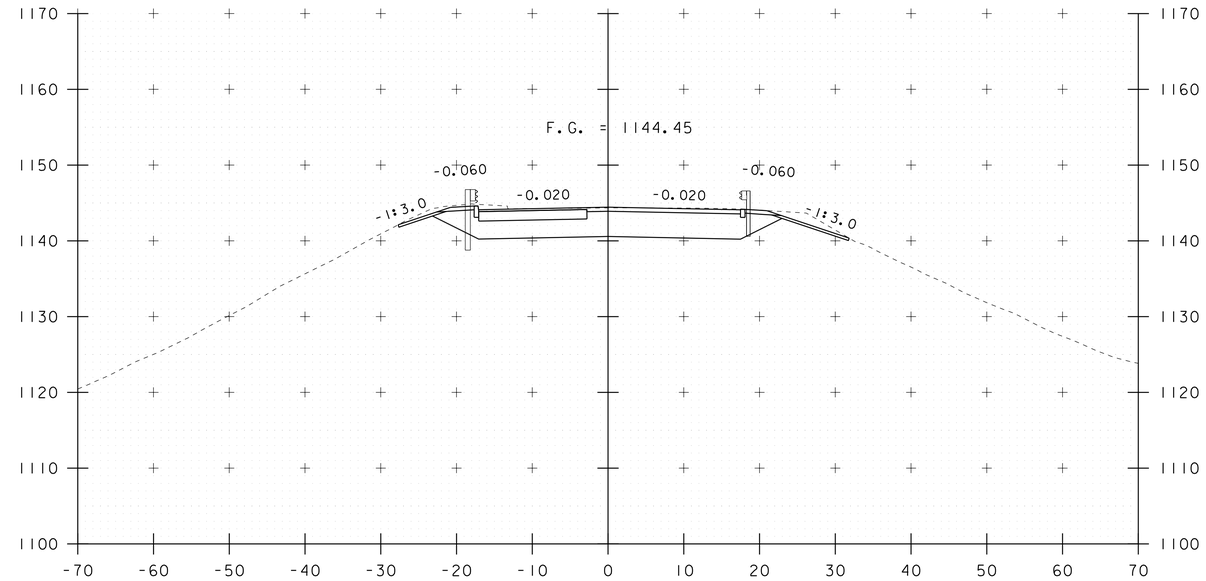

153+00

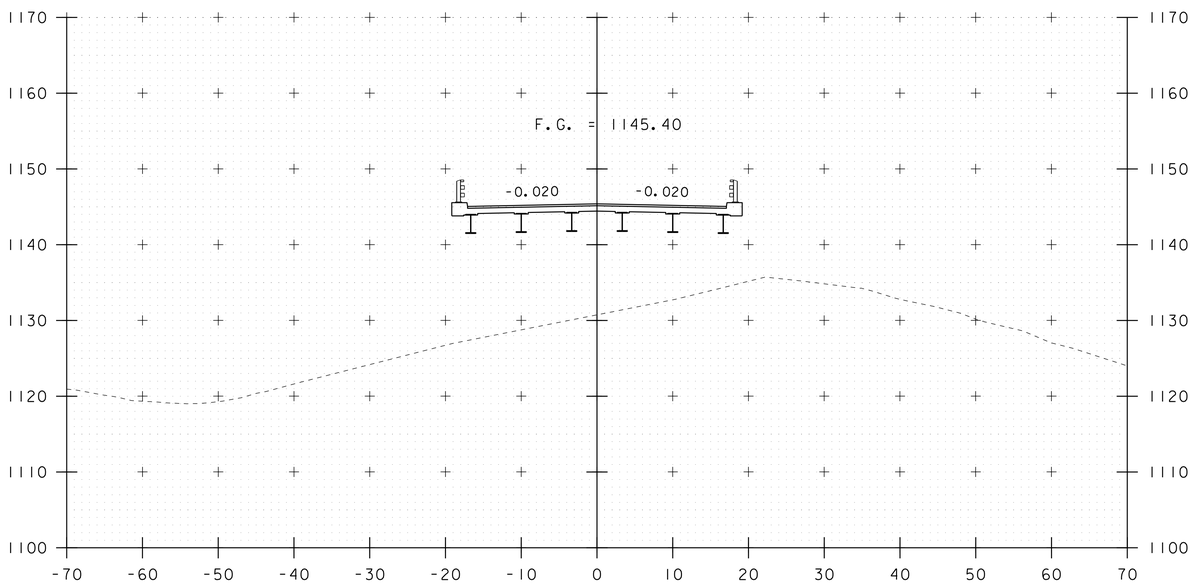

152+50

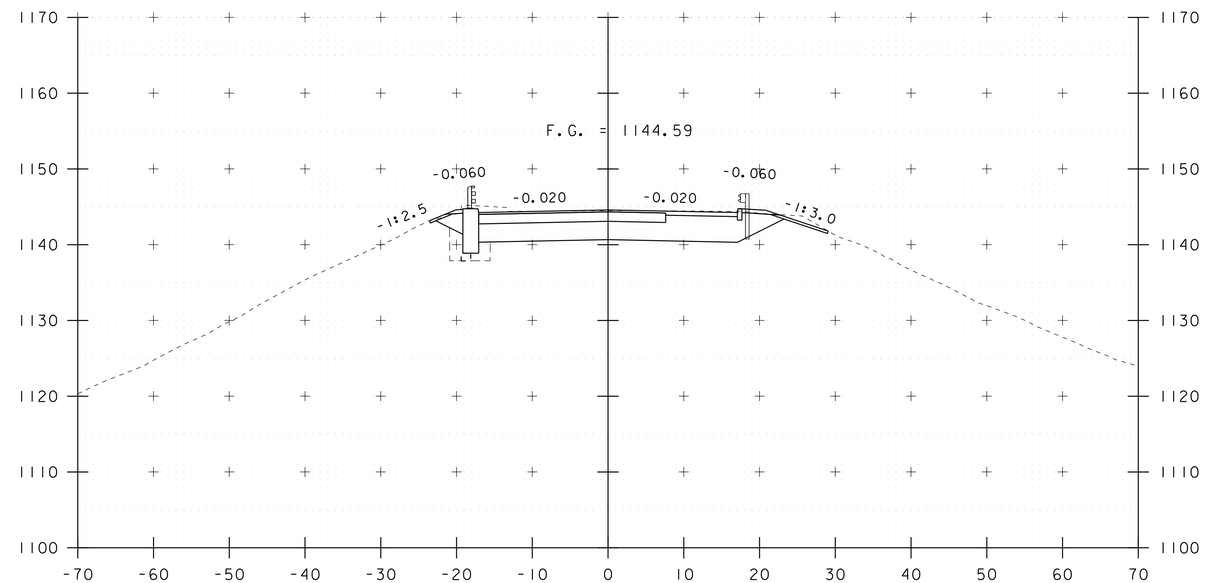

152+94

STA 152+78.39
END BRIDGE

10 0 10
SCALE: 1" = 10'-0"

STA. 152+50 TO STA. 153+00

PROJECT NAME: DERBY	
PROJECT NUMBER: IM 091-3(49)	
FILE NAME: s12a274xsl.dgn	PLOT DATE: 02-JUN-2017
PROJECT LEADER: C. CARLSON	DRAWN BY: G. ROY
DESIGNED BY: D. PETERSON	CHECKED BY: J. LACY
TH 1 CROSS SECTIONS (4)	SHEET 53 OF 73

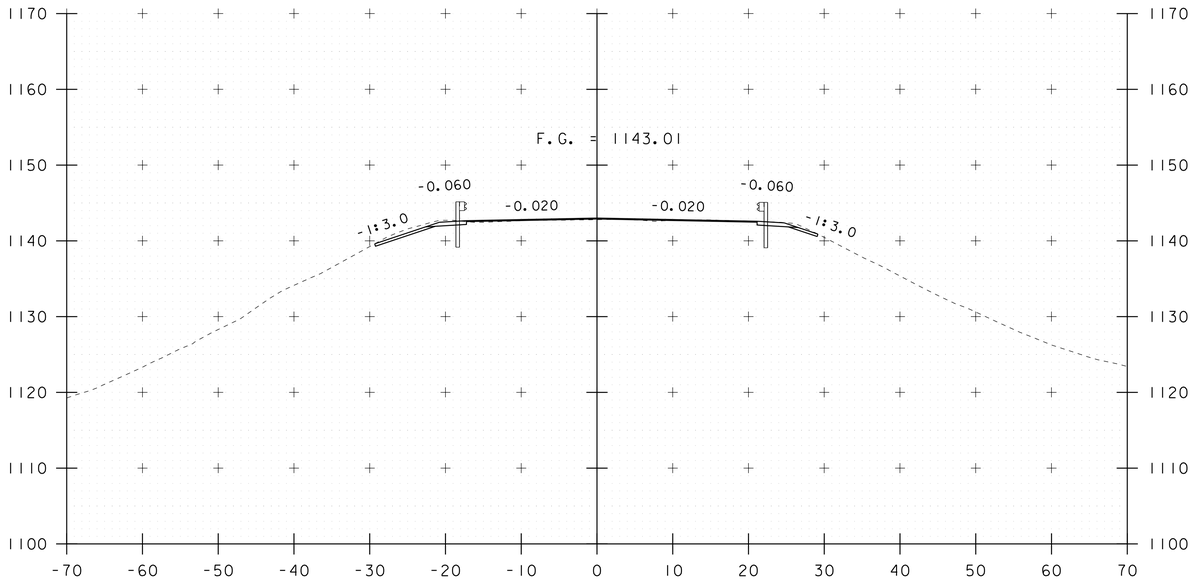

153+50

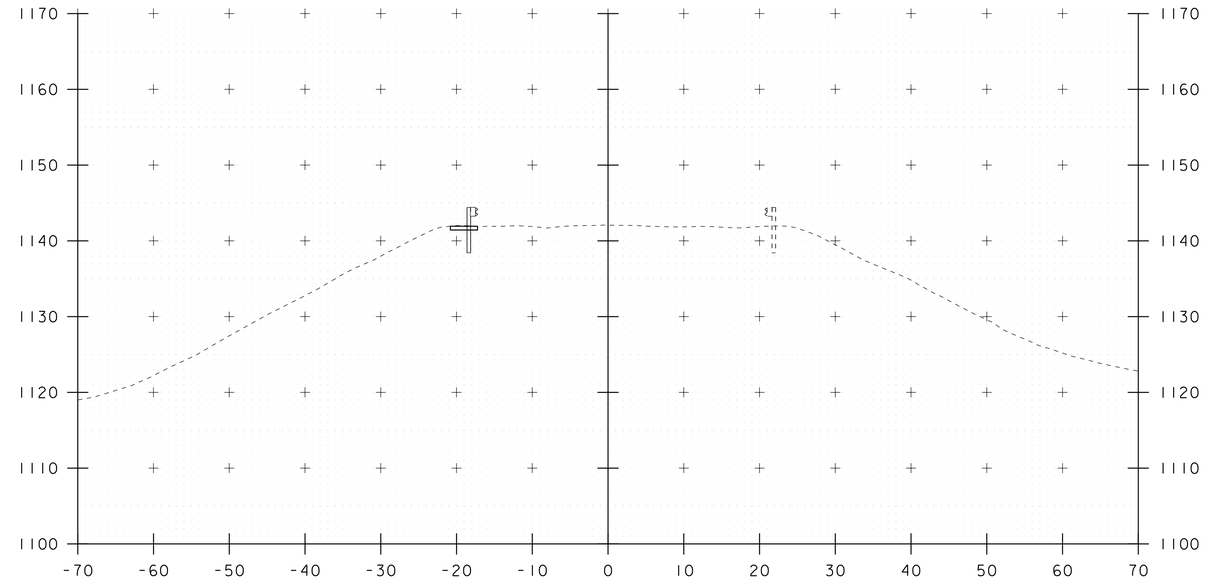

153+75

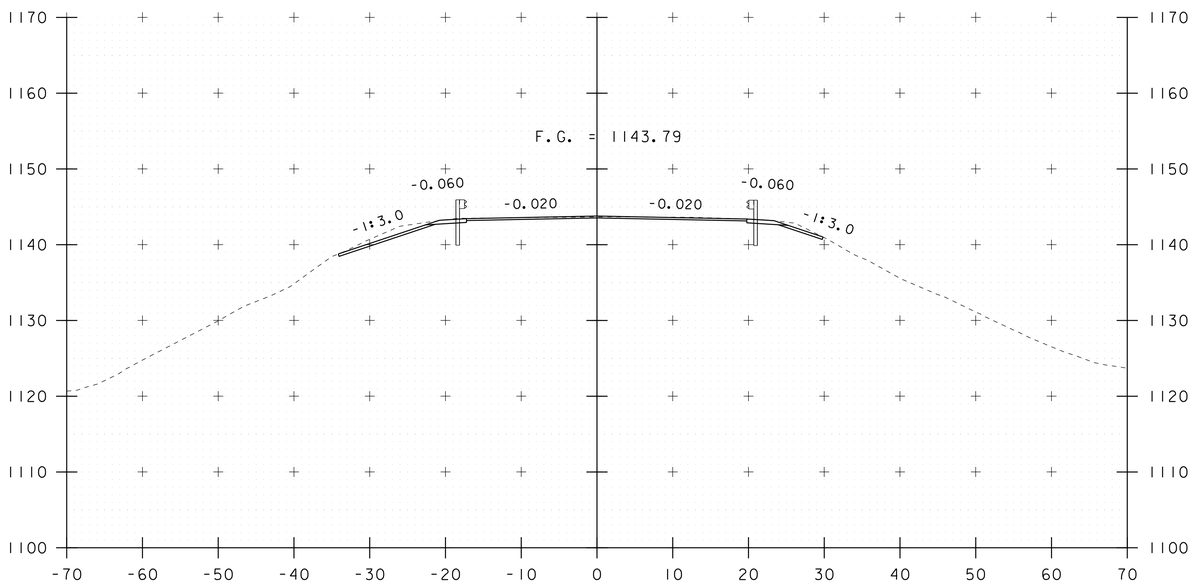

153+25

STA 153+15.00
END PROJECT

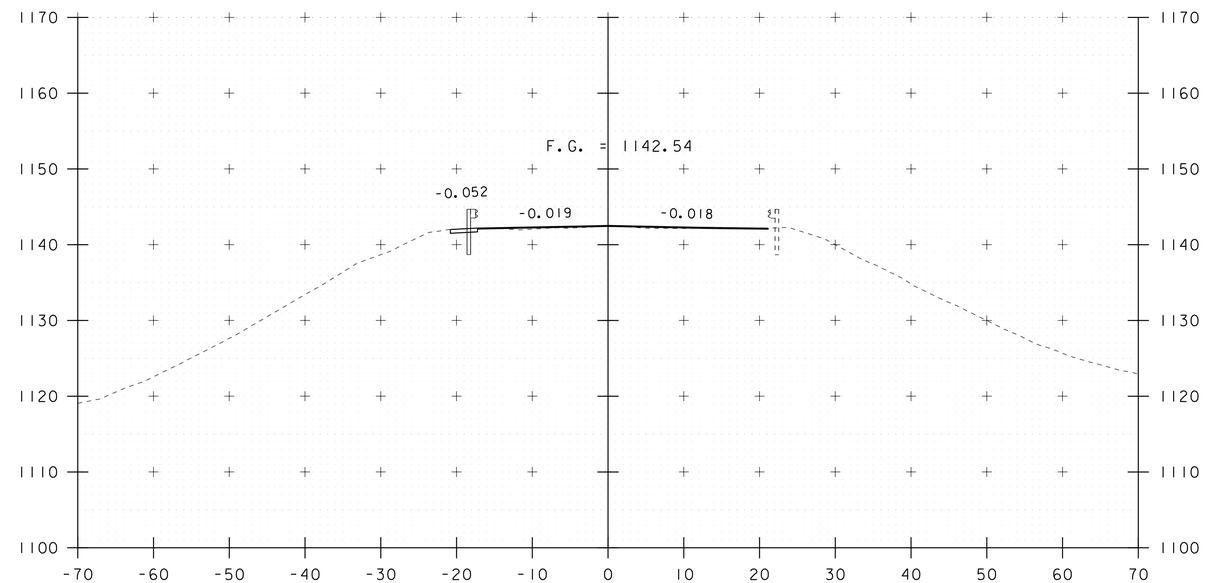

153+65

STA 153+65.00
END APPROACH
MATCH EXISTING

10 0 10
SCALE: 1" = 10'-0"

STA. 153+25 TO STA. 153+75

PROJECT NAME: DERBY	
PROJECT NUMBER: IM 091-3(49)	
FILE NAME: s12a274xsl.dgn	PLOT DATE: 02-JUN-2017
PROJECT LEADER: C. CARLSON	DRAWN BY: G. ROY
DESIGNED BY: D. PETERSON	CHECKED BY: J. LACY
TH 1 CROSS SECTIONS (5)	SHEET 54 OF 73

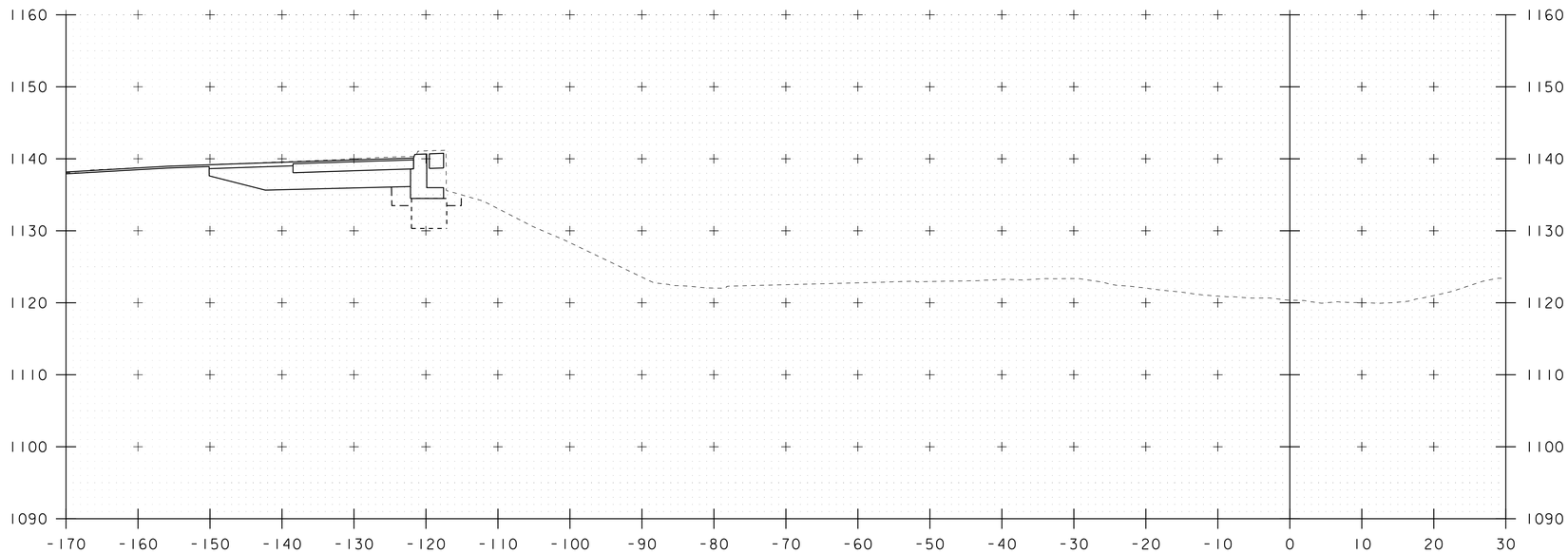

STA 10+52.8 LT
BEGIN STRUCTURE EXCAVATION
GRANULAR BACKFILL FOR STRUCTURES

10+60

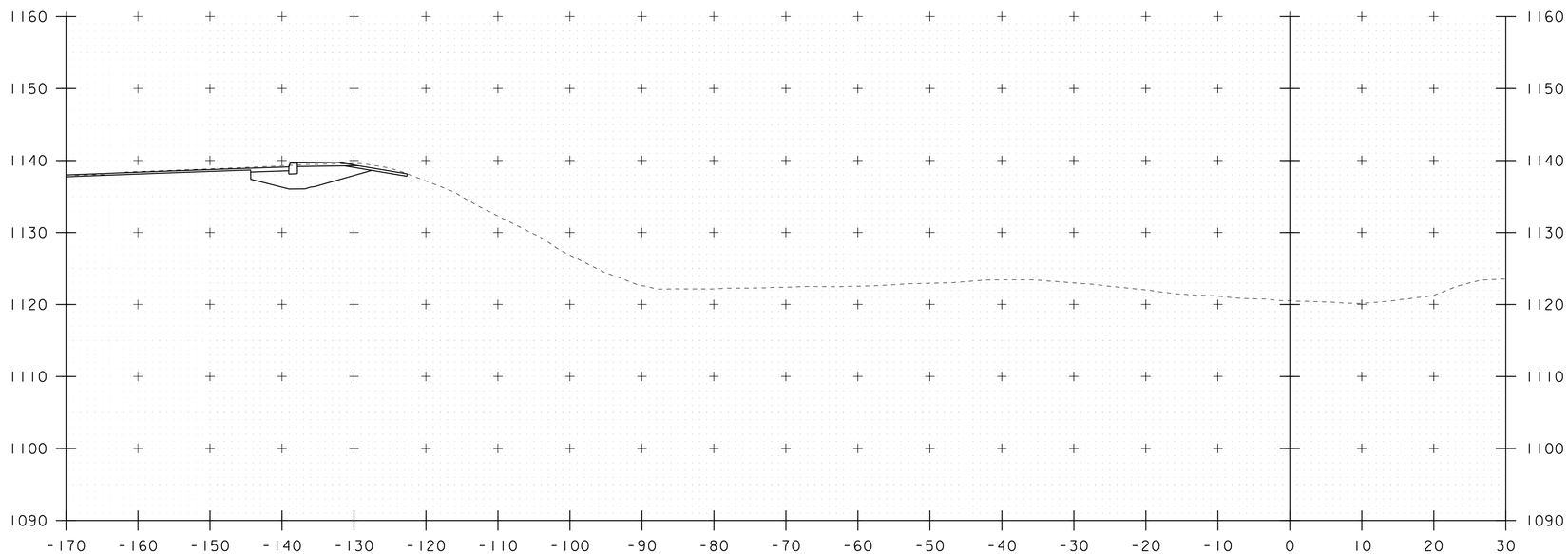

10+50

10 0 10
SCALE: 1" = 10'-0"

STA. 10+50 TO STA. 10+60

PROJECT NAME: DERBY	
PROJECT NUMBER: IM 091-3(49)	
FILE NAME: s12a274xsl.dgn	PLOT DATE: 02-JUN-2017
PROJECT LEADER: C. CARLSON	DRAWN BY: G. ROY
DESIGNED BY: D. PETERSON	CHECKED BY: J. LACY
I-91 CROSS SECTIONS (1)	SHEET 55 OF 73

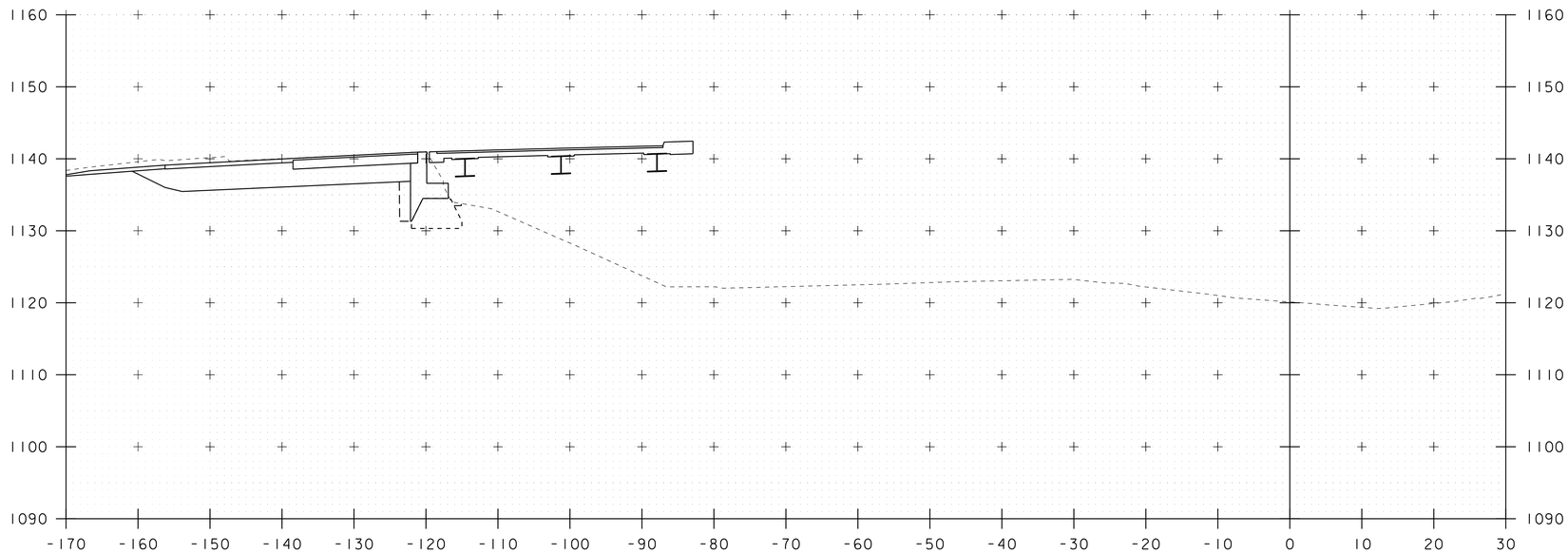

10+80

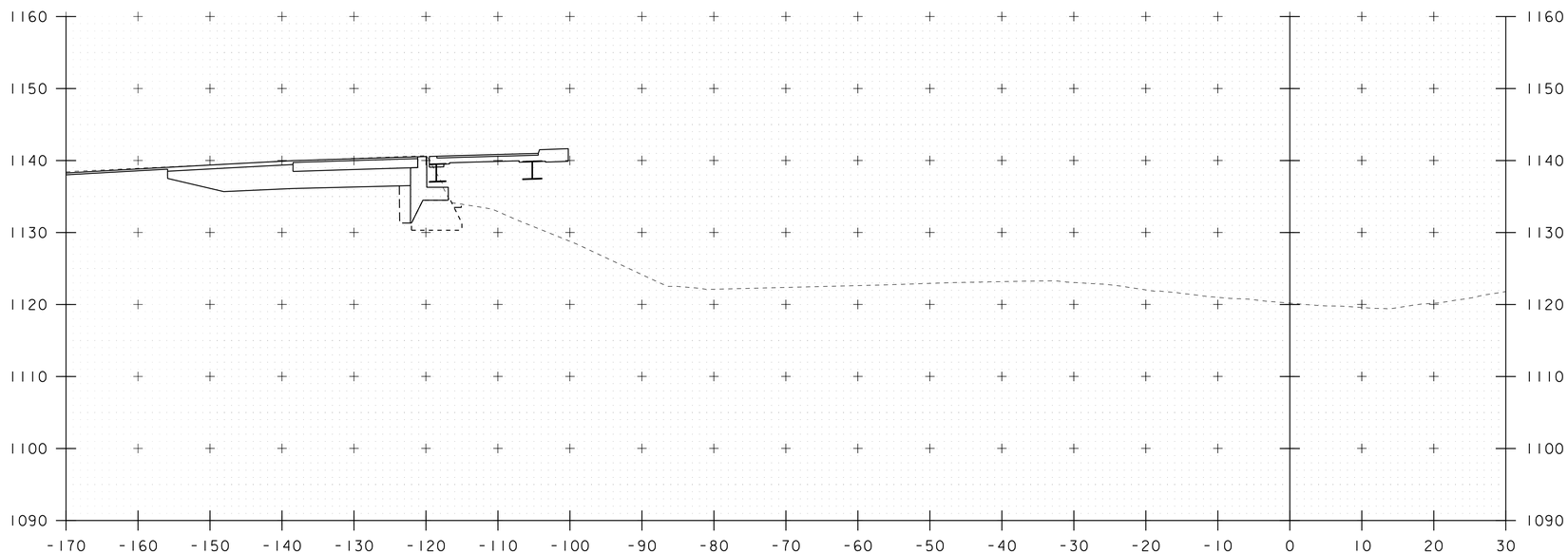

10+70

10 0 10

SCALE: 1" = 10'-0"

STA. 10+70 TO STA. 10+80

PROJECT NAME: DERBY	
PROJECT NUMBER: IM 091-3(49)	
FILE NAME: s12a274xs1.dgn	PLOT DATE: 02-JUN-2017
PROJECT LEADER: C. CARLSON	DRAWN BY: G. ROY
DESIGNED BY: D. PETERSON	CHECKED BY: J. LACY
I-91 CROSS SECTIONS (2)	SHEET 56 OF 73

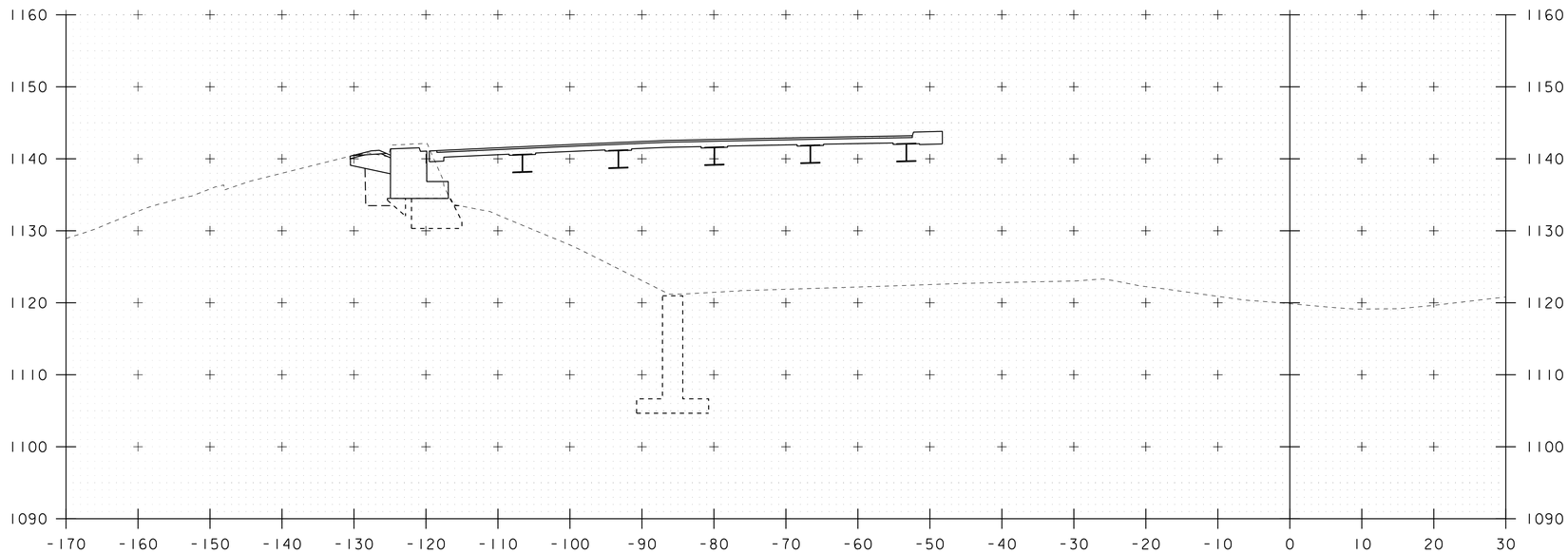

11+00

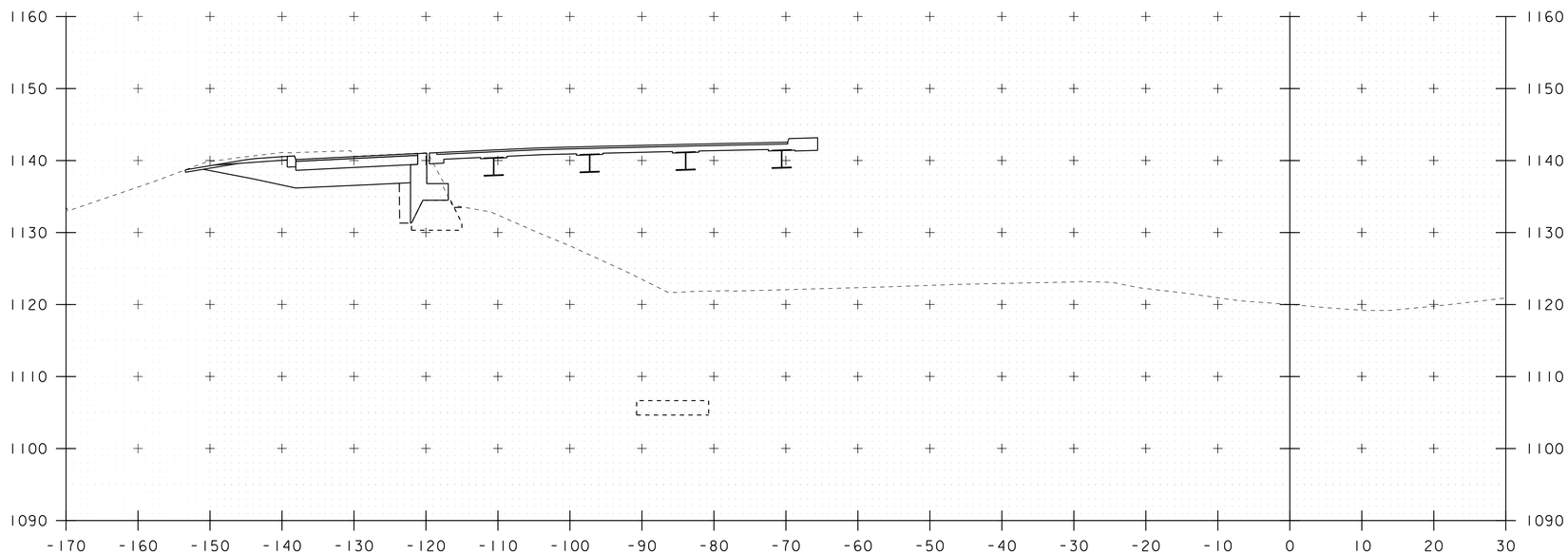

10+90

10 0 10

SCALE: 1" = 10'-0"

STA. 10+90 TO STA. 11+00

PROJECT NAME: DERBY	
PROJECT NUMBER: IM 091-3(49)	
FILE NAME: s12a274xs1.dgn	PLOT DATE: 02-JUN-2017
PROJECT LEADER: C. CARLSON	DRAWN BY: G. ROY
DESIGNED BY: D. PETERSON	CHECKED BY: J. LACY
I-91 CROSS SECTIONS (3)	SHEET 57 OF 73

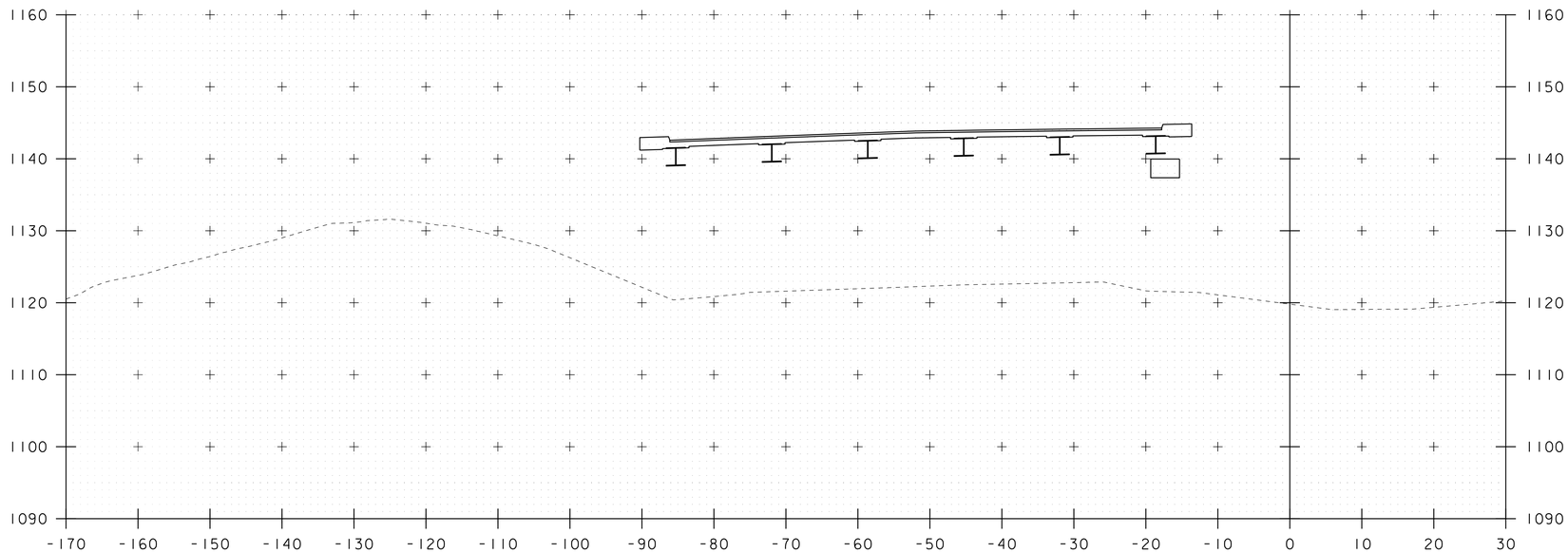

11+20

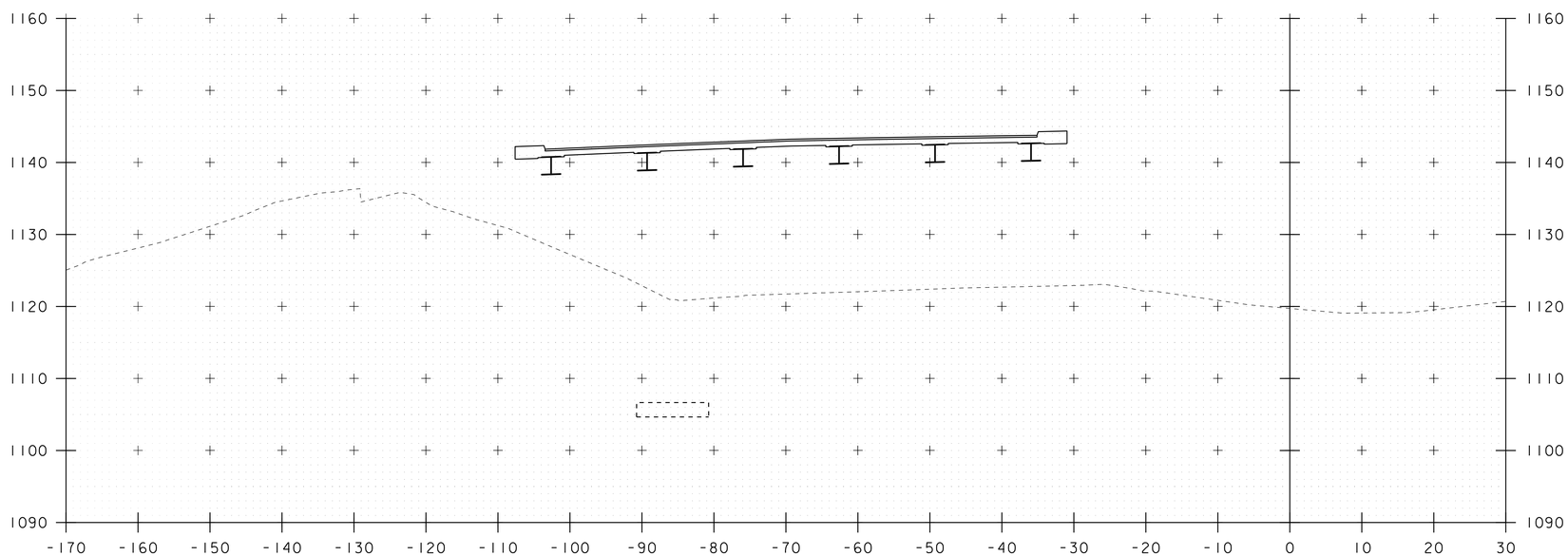

STA 11+07.7 LT
END STRUCTURE EXCAVATION
GRANULAR BACKFILL FOR STRUCTURES

11+10

10 0 10
SCALE: 1" = 10'-0"

STA. 11+10 TO STA. 11+20

PROJECT NAME: DERBY	
PROJECT NUMBER: IM 091-3(49)	
FILE NAME: s12a274xs1.dgn	PLOT DATE: 02-JUN-2017
PROJECT LEADER: C. CARLSON	DRAWN BY: G. ROY
DESIGNED BY: D. PETERSON	CHECKED BY: J. LACY
I-91 CROSS SECTIONS (4)	SHEET 58 OF 73

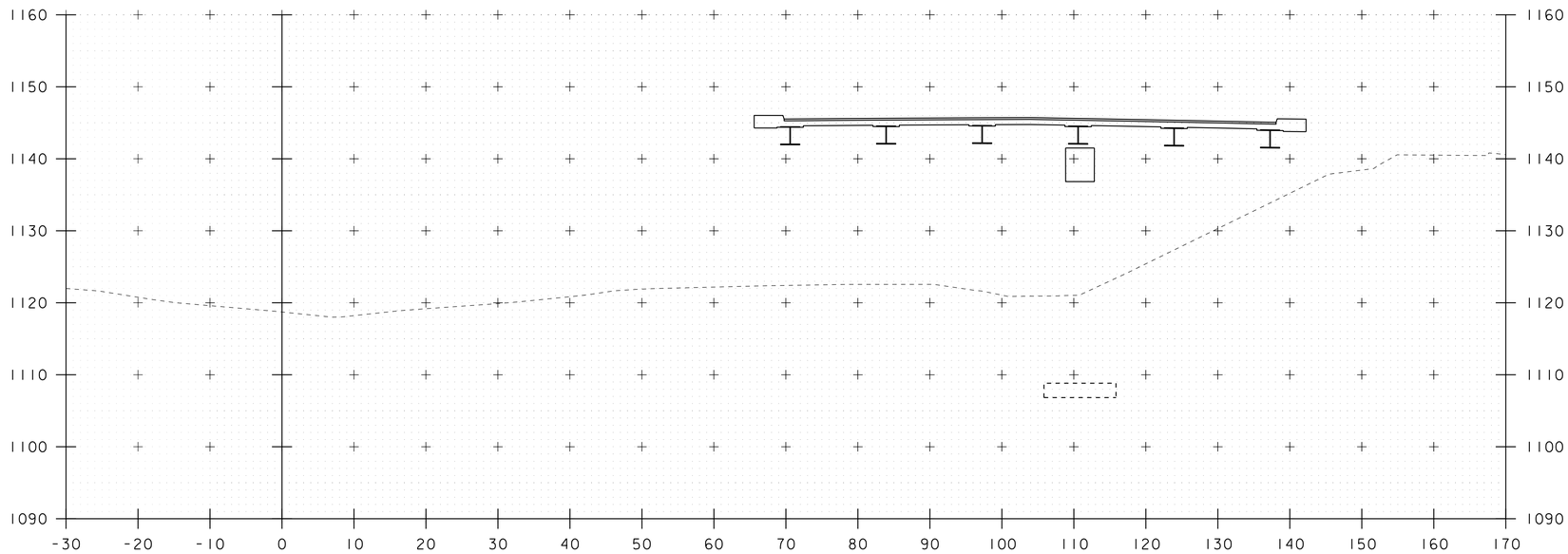

12+10

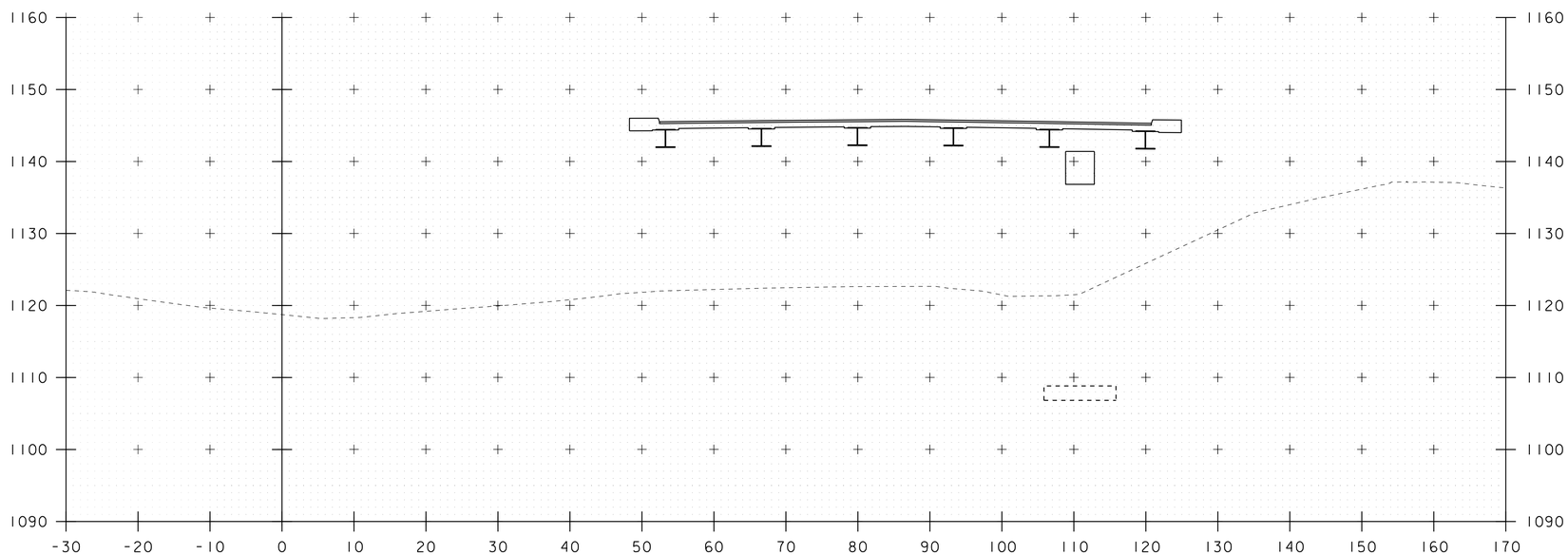

12+00

10 0 10

SCALE: 1" = 10'-0"

STA. 12+00 TO STA. 12+10

PROJECT NAME: DERBY	
PROJECT NUMBER: IM 091-3(49)	
FILE NAME: s12a274xsl.dgn	PLOT DATE: 02-JUN-2017
PROJECT LEADER: C. CARLSON	DRAWN BY: G. ROY
DESIGNED BY: D. PETERSON	CHECKED BY: J. LACY
I-91 CROSS SECTIONS (5)	SHEET 59 OF 73

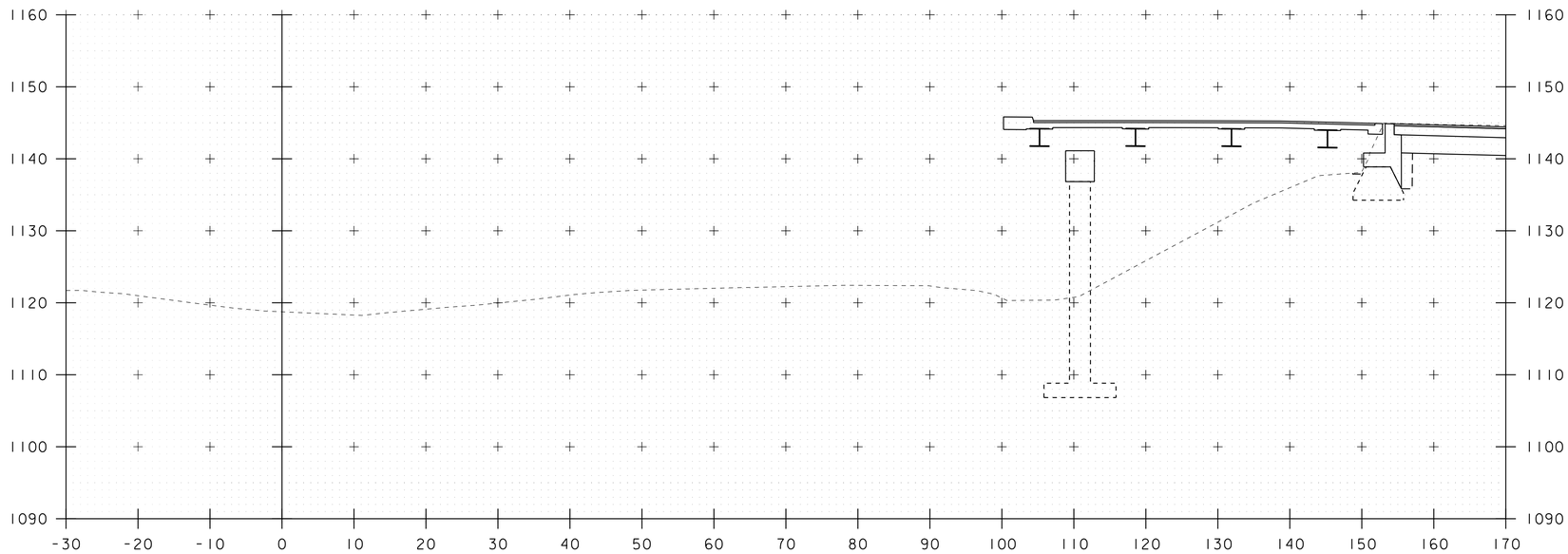

12+30

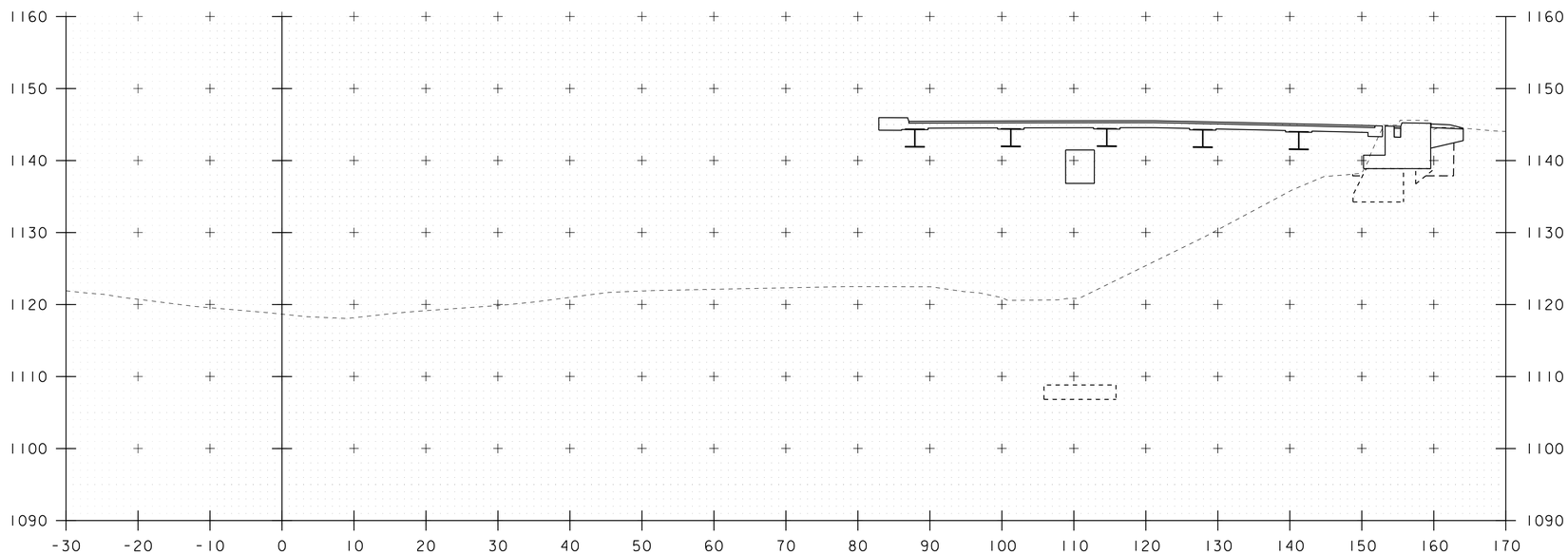

12+20

STA 12+11.8 RT
BEGIN STRUCTURE EXCAVATION
GRANULAR BACKFILL FOR STRUCTURES

10 0 10
SCALE: 1" = 10'-0"

STA. 12+20 TO STA. 12+30

PROJECT NAME: DERBY	
PROJECT NUMBER: IM 091-3(49)	
FILE NAME: s12a274xsl.dgn	PLOT DATE: 02-JUN-2017
PROJECT LEADER: C. CARLSON	DRAWN BY: G. ROY
DESIGNED BY: D. PETERSON	CHECKED BY: J. LACY
I-91 CROSS SECTIONS (6)	SHEET 60 OF 73

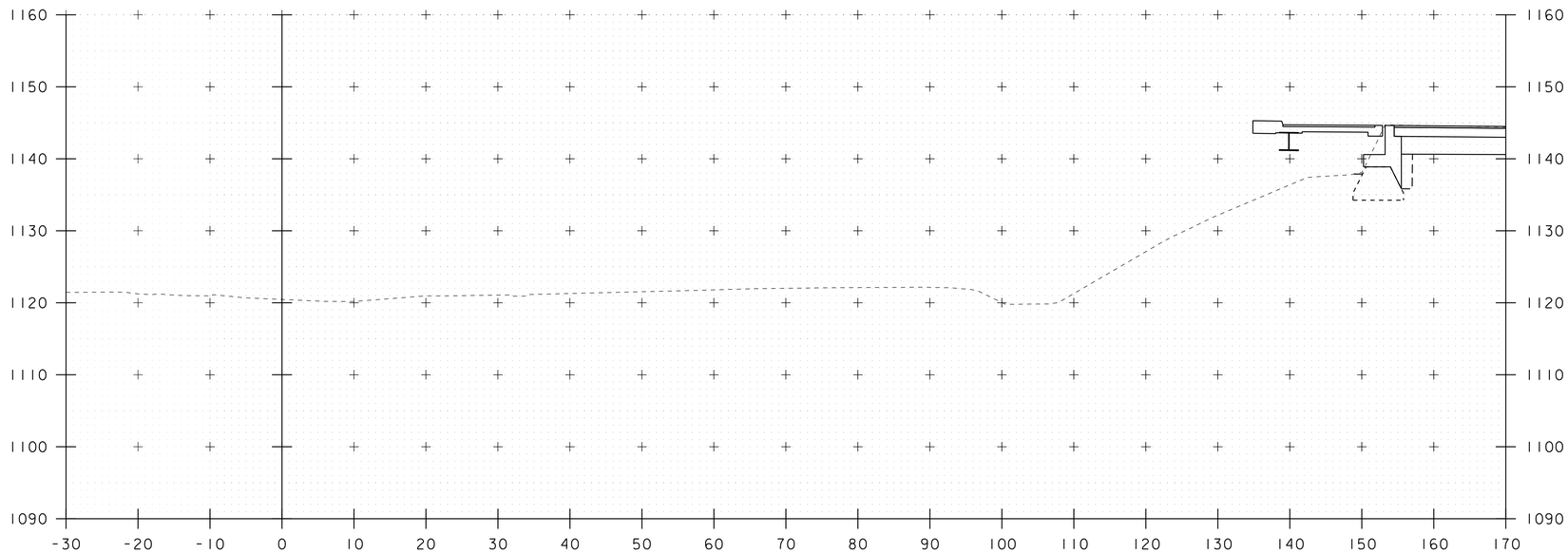

12+50

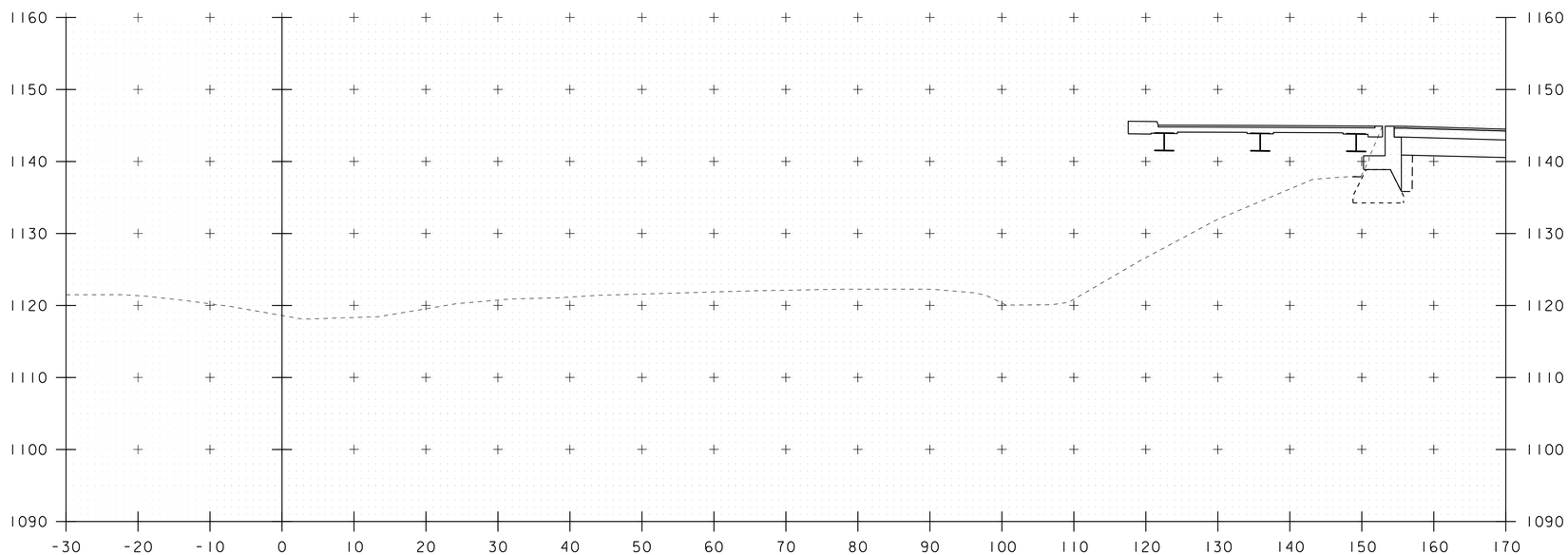

12+40

10 0 10

SCALE: 1" = 10'-0"

STA. 12+40 TO STA. 12+50

PROJECT NAME: DERBY	
PROJECT NUMBER: IM 091-3(49)	
FILE NAME: s12a274xs1.dgn	PLOT DATE: 02-JUN-2017
PROJECT LEADER: C. CARLSON	DRAWN BY: G. ROY
DESIGNED BY: D. PETERSON	CHECKED BY: J. LACY
I-91 CROSS SECTIONS (7)	SHEET 61 OF 73

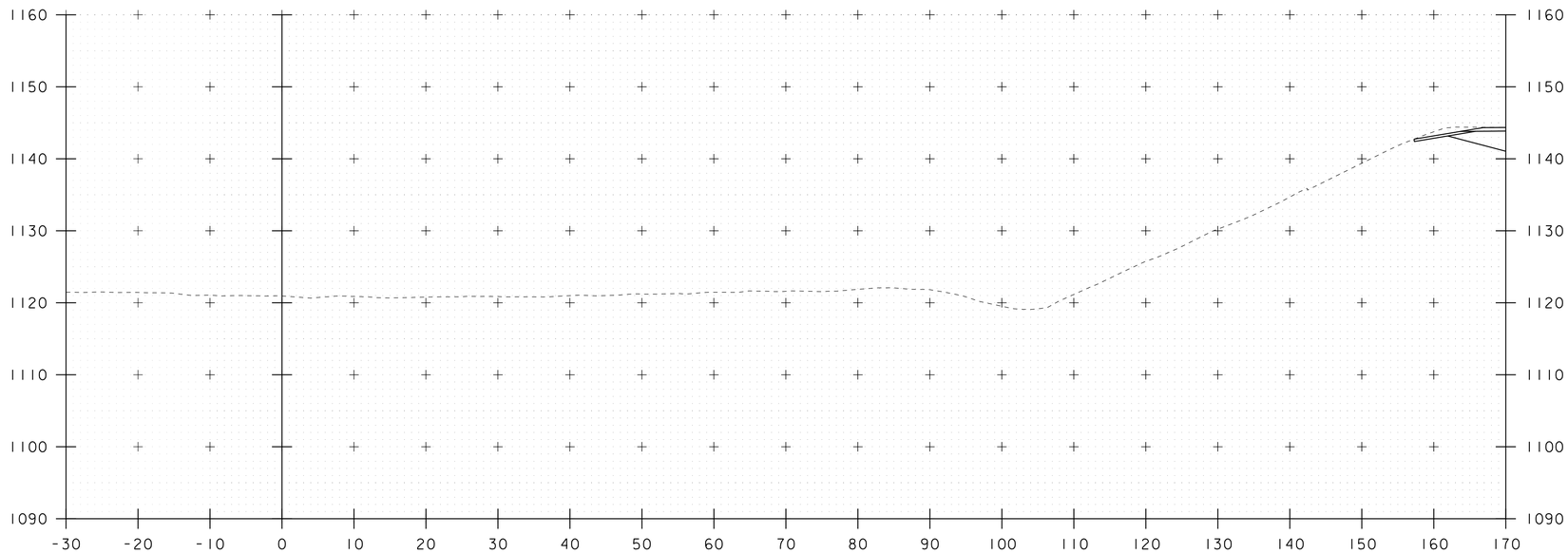

12+70

STA 12+66.5 RT
END STRUCTURE EXCAVATION
GRANULAR BACKFILL FOR STRUCTURES

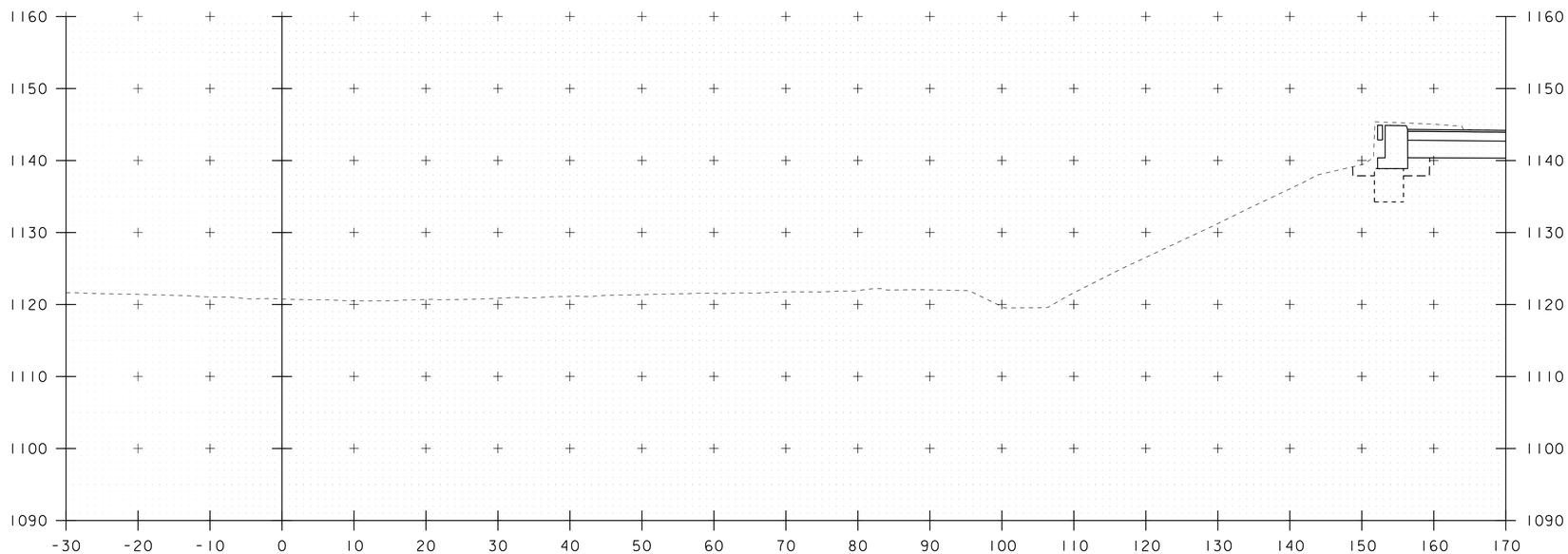

12+60

10 0 10
SCALE: 1" = 10'-0"

STA. 12+60 TO STA. 12+70

PROJECT NAME: DERBY	
PROJECT NUMBER: IM 091-3(49)	
FILE NAME: s12a274xsl.dgn	PLOT DATE: 02-JUN-2017
PROJECT LEADER: C. CARLSON	DRAWN BY: G. ROY
DESIGNED BY: D. PETERSON	CHECKED BY: J. LACY
I-91 CROSS SECTIONS (8)	SHEET 62 OF 73

EPSC PLAN NARRATIVE

1.1 PROJECT DESCRIPTION

THIS PROJECT INVOLVES THE FULL REPLACEMENT OF THE 318.28 FOOT MULTI SPAN BRIDGE DECK. THE TOPS OF THE ABUTMENT AND WING WALL WILL BE REMOVED AND CAPED WITH NEW CONCRETE AND REINFORCING. THERE ARE FOUR EXISTING PIERS, THE WESTERN MOST PIER WILL BE REMOVED AND THE BRIDGE WILL SPAN OVER ITS LOCATION. THE REMAINING PIERS WILL BE REHABILITATED. THE PROPOSED BRIDGE IS ON THE EXISTING ALIGNMENT. THE BRIDGE IS LOCATED IN THE TOWN OF DERBY, ON CASWELL AVENUE (US 5 CONNECTOR) AND SPANS OVER I-91 NORTH AND SOUTH. THE BRIDGE IS LOCATED NEAR THE US AND CANADA BORDER, BETWEEN THE US AND CANADIAN BORDER CROSSING STATIONS ON I-91. THE LENGTH OF THE PROJECT WILL NOT CHANGE BUT THE BRIDGE WILL CHANGE FROM A FIVE (5) SPAN BRIDGE TO A FOUR (4) SPAN BRIDGE.

TOTAL AREA OF DISTURBANCE 0.62 ACRES.

IT IS ANTICIPATED THAT THIS PROJECT WILL LAST ONE CONSTRUCTION SEASON.

IMPACT AREA	AREA ACRES
ABUT #1 & PIER #1	0.27
PIER #2	0.04
PIER #3	0.05
PIER #4 & ABUT #2	0.26
TOTAL	0.62

1.2 SITE INVENTORY

1.2.1 TOPOGRAPHY

THE TOPOGRAPHY OF THE AREA IS RELATIVELY FLAT OR ROLLING HILL FARM LANDS. THE PROJECT IS A RAISED-UP ROADWAY BED TO CROSS I-91. THERE IS A MIX OF WOODED AREA, LOW VEGETATION, AND PAVED PARKING AND ROADWAY SURFACES.

1.2.2 DRAINAGE, WATERWAYS, BODIES OF WATER, AND PROXIMITY TO NATURAL OR MAN-MADE WATER FEATURES

THERE IS NO WATER SOURCE IN THE PROJECT AREA OR SITE. THE NEAREST RIVER IS TOMIFOBIA RIVER GENERALLY ON THE CANADIAN SIDE OF THE BORDER APPROXIMATELY ONE-HALF MILE WEST OF THE PROJECT. THERE ARE A NUMBER OF DROP INLETS NEAR THE US BORDER STATION BUT NONE IN THE PROJECT AREA. THERE IS ONE CULVERT THROUGH THE PROJECT AREA BETWEEN THE EAST MOST PIER AND ABUTMENT #2 THAT SHOULD BE PROTECTED FROM DAMAGE, BUT THE INLET AND OUTLET ARE OFF THE PROJECT SITE.

1.2.3 VEGETATION

THE VEGETATION IN THE PROJECT AREA CONSISTS OF HARDWOOD TREES AND UNDERGROWTH. THE IMPACT TO VEGETATION WILL BE LIMITED TO THAT WHICH IS DIRECTLY AFFECTED BY REPLACEMENT OF BRIDGE DECK AND REHABILITATION OF THE ABUTMENTS AND PIERS. UPON PROJECT COMPLETION, THE DISTURBED VEGETATION WILL BE REESTABLISHED WITH STANDARD SEED AND MULCH PRACTICES.

1.2.4 SOILS

ALL SOIL DATA CAME FROM THE U.S. DEPARTMENT OF AGRICULTURE SOIL CONSERVATION SERVICE FOR THE COUNTY OF ORLEANS, VERMONT. SOILS ON THE PROJECT SITE ARE BUCKLAND FINE SANDY LOAM (POTENTIALLY HIGHLY ERODIBLE) K-FACTOR 0.32, 3%-8% SLOPES, HYDROLOGICAL SOIL GROUP:C.

NOTE: K-VALUES GENERALLY INDICATE THE FOLLOWING:
0.0-0.23 = LOW EROSION POTENTIAL
0.24-0.36 = MODERATE EROSION POTENTIAL
0.37 AND HIGHER = HIGH EROSION POTENTIAL

1.2.5 SENSITIVE RESOURCE AREAS

CRITICAL HABITATS: NO
HISTORICAL OR ARCHEOLOGICAL AREAS: NO
PRIME AGRICULTURAL LAND: NO
THREATENED AND ENDANGERED SPECIES: YES-POSSIBLE BAT HABITAT
WATER RESOURCE: NO
WETLANDS: NO

1.3 RISK EVALUATION

THIS PROJECT DOES NOT FALL UNDER THE JURISDICTION OF GENERAL PERMIT 3-9020 FOR STORMWATER RUNOFF FROM CONSTRUCTION SITES. SHOULD CHANGES PRIOR TO OR DURING CONSTRUCTION RESULT IN ONE OR MORE ACRES OF EARTH DISTURBANCE OR SHOULD THE PROJECT BECOME PART OF A LARGER PLAN OF DEVELOPMENT, THE CONTRACTOR WILL BE RESPONSIBLE FOR ANY ADDITIONAL PERMITTING.

1.4 EROSION PREVENTION AND SEDIMENT CONTROL

THE EROSION CONTROL PLANS ARE MEANT AS A GUIDELINE FOR PREVENTING EROSION AND CONTROLLING SEDIMENT TRANSPORT. THE PRINCIPLES OUTLINED IN THIS NARRATIVE CONSIST OF APPLYING MEASURES THROUGHOUT CONSTRUCTION OF THE PROJECT IN ORDER TO MINIMIZE SEDIMENT TRANSPORT TO THE RECEIVING WATERS. THE MEASURES INCLUDE STABILIZATION AND STRUCTURAL PRACTICES, STORM WATER CONTROLS AND OTHER POLLUTION PREVENTION PRACTICES. THEY HAVE BEEN PROPOSED BY THE DESIGNER AS A BASIS FOR PROTECTING RESOURCES AND WILL NEED TO BE BUILT UPON BASED ON THE SPECIFIC MEANS AND METHODS OF THE CONTRACTOR. REFER TO THE LOW RISK SITE HANDBOOK AND APPROPRIATE DETAIL SHEETS FOR SPECIFIC GUIDANCE AND CONSTRUCTION DETAILING.

ALL MEASURES SHALL BE REGULARLY MAINTAINED AND SHALL BE CHECKED FOR SEDIMENT BUILD-UP. SEDIMENT SHALL BE DISPOSED OF AT AN APPROVED SITE WHERE IT WILL NOT BE SUBJECT TO EROSION.

1.4.1 MARK SITE BOUNDARIES

SITE BOUNDARIES AND AREAS CONSTRUCTION EQUIPMENT CAN ACCESS SHALL BE DELINEATED.

PROJECT DEMARCATION FENCING (PDF) SHALL BE USED TO PHYSICALLY MARK SITE BOUNDARIES.

1.4.2 LIMIT DISTURBANCE AREA

PREVENTING INITIAL SOIL EROSION BY MINIMIZING THE EXPOSED AREA IS MUCH MORE EFFECTIVE THAN TREATING ERODED SEDIMENT. EARTH DISTURBANCE CAN BE MINIMIZED THROUGH CONSTRUCTION PHASING BY ONLY OPENING UP EARTH AS NECESSARY. THIS CAN LIMIT THE AREA THAT WILL BE DISTURBED AND EXPOSED TO EROSION. EMPLOY TEMPORARY CONSTRUCTION STABILIZATION PRACTICES IN INCREMENTAL STAGES AS PHASES CHANGE. FOR PROJECTS, WHICH FALL UNDER THE CONSTRUCTION GENERAL PERMIT, ONLY THE ACREAGE LISTED ON THE PERMIT AUTHORIZATION MAY BE EXPOSED AT ANY GIVEN TIME.

MAINTAINING VEGETATED BUFFERS ALONG STREAM BANKS, WETLANDS OR OTHER SENSITIVE AREAS IS A CRUCIAL EROSION AND SEDIMENT CONTROL MEASURE THAT SHOULD BE ESTABLISHED WHEREVER POSSIBLE.

1.4.3 SITE ENTRANCE/EXIT STABILIZATION

TRACKING OF SEDIMENT ONTO PUBLIC HIGHWAYS SHALL BE MINIMIZED TO REDUCE THE POTENTIAL FOR RUNOFF ENTERING RECEIVING WATERS. INSTALLATION SHALL COINCIDE WITH THE CONTRACTORS PROGRESS SCHEDULE.

STABILIZED CONSTRUCTION ENTRANCES SHALL BE INSTALLED AS PROPOSED ON THE EPSC PLAN AND ANYWHERE EQUIPMENT WILL BE GOING FROM AREAS OF EXPOSED SOILS TO PAVED SURFACES.

1.4.4 INSTALL SEDIMENT BARRIERS

SEDIMENT BARRIERS SHALL BE UTILIZED TO INTERCEPT RUNOFF AND ALLOW SUSPENDED SEDIMENT TO SETTLE OUT. THEY SHALL BE INSTALLED PRIOR TO ANY UP-SLOPE WORK.

NO SEDIMENT BARRIERS ARE ANTICIPATED TO BE USED ON THIS PROJECT.

1.4.5 DIVERT UPLAND RUNOFF

DIVERSIONARY MEASURES SHALL BE USED TO INTERCEPT RUNOFF FROM ABOVE THE CONSTRUCTION AND DIRECT IT AROUND THE DISTURBED AREA SO THAT CLEAN WATER DOES NOT BECOME MUDDIED WHILE TRAVELING OVER EXPOSED SOILS ON THE CONSTRUCTION SITE.

IT IS NOT ANTICIPATED THAT DIVERSION MEASURES WILL BE NECESSARY. THE STRUCTURE ITSELF IF THE HIGH POINT OF THE SURROUNDING TOPOGRAPHY AND DIVERTING OFFSITE RUNOFF IS NOT NECESSARY.

1.4.6 SLOW DOWN CHANNELIZED RUNOFF

CHECK STRUCTURES SHALL BE UTILIZED TO REDUCE THE VELOCITY, AND THUS THE EROSIVE POTENTIAL, OF CONCENTRATED FLOW IN CHANNELS.

THERE ARE NO CHANNELS THAT WILL REQUIRE CHECK STRUCTURES.

1.4.7 CONSTRUCT PERMANENT CONTROLS

PERMANENT STORMWATER TREATMENT DEVICES SHALL BE INSTALLED AS SHOWN ON THE PLANS AND IN ACCORDANCE WITH THE PERMIT CONDITIONS.

NO PERMANENT STORMWATER CONTROL DEVICES ARE PLANNED.

1.4.8 STABILIZE EXPOSED SOILS DURING CONSTRUCTION

ALL AREAS OF DISTURBANCE MUST HAVE TEMPORARY STABILIZATION IN PLACE WITHIN 48 HOURS OF DISTURBANCE OR IN ACCORDANCE WITH THE CONSTRUCTION GENERAL PERMIT 3-9020 AUTHORIZATION.

SURFACE ROUGHENING OF ALL EXPOSED SLOPES, COMBINED WITH TEMPORARY MULCHING, SHALL BE UTILIZED ON A REGULAR BASIS. BIODEGRADABLE EROSION CONTROL MATTING OR AN EQUIVALENT SHALL BE USED TO STABILIZE ALL SLOPES STEEPER THAN 1:3.

THE FORECAST OF RAINFALL EVENTS SHALL TRIGGER IMMEDIATE PROTECTION OF EXPOSED SOILS.

1.4.9 WINTER STABILIZATION

VARIOUS MEASURES SPECIFIC TO WINTER MAY BE NECESSARY SHOULD THE PROJECT EXTEND INTO WINTER (OCTOBER 15 THROUGH APRIL 15). REFER TO THE LOW RISK SITE HANDBOOK FOR GUIDANCE.

WINTER STABILIZATION, IF REQUIRED, WILL BE AS INDICATED ON A SITE SPECIFIC EPSC PLAN SUBMITTED BY THE CONTRACTOR IN ACCORDANCE WITH 652.01 AND 652.04.

1.4.10 STABILIZE SOIL AT FINAL GRADE

EXPOSED SOIL MUST BE STABILIZED WITHIN 48 HOURS OF REACHING FINAL GRADE.

SEED, MULCH, FERTILIZER AND LIME SHALL BE USED TO ESTABLISH PERMANENT VEGETATION. FOR SLOPES STEEPER THAN 1:3, BIODEGRADABLE EROSION CONTROL MATTING OR AN EQUIVALENT SHALL BE USED INSTEAD OF MULCH.

1.4.11 DEWATERING ACTIVITIES

DISCHARGE FROM DEWATERING ACTIVITIES THAT FLOWS OFF OF THE CONSTRUCTION SITE MUST NOT CAUSE OR CONTRIBUTE TO A VIOLATION OF THE VERMONT WATER QUALITY STANDARDS.

THIS PROJECT IS DRY CROSSING OF ANOTHER HIGHWAY. AS SUCH DEWATERING ACTIVITIES WILL NOT BE REQUIRED.

1.4.12 INSPECT YOUR SITE

INSPECT THE PROJECT SITE BASED ON SPECIAL PROVISION REQUIREMENTS OR CONSTRUCTION GENERAL PERMIT AUTHORIZATION STIPULATIONS.

1.5 SEQUENCE AND STAGING

THIS SECTION WILL BE DEVELOPED BY THE CONTRACTOR USING THE GUIDANCE OUTLINED IN THE VTRANS EPSC PLAN CONTRACTOR CHECKLIST.

1.5.1 CONSTRUCTION SEQUENCE

1.5.2 OFF-SITE ACTIVITIES

IN ADDITION TO THE CONTRACTOR CHECKLIST ANY ACTIVITIES OUTSIDE THE CONSTRUCTION LIMITS SHALL FOLLOW SPECIFICATION 105.25- 105.29 OF THE STANDARD SPECIFICATIONS FOR CONSTRUCTION.

1.5.3 UPDATES

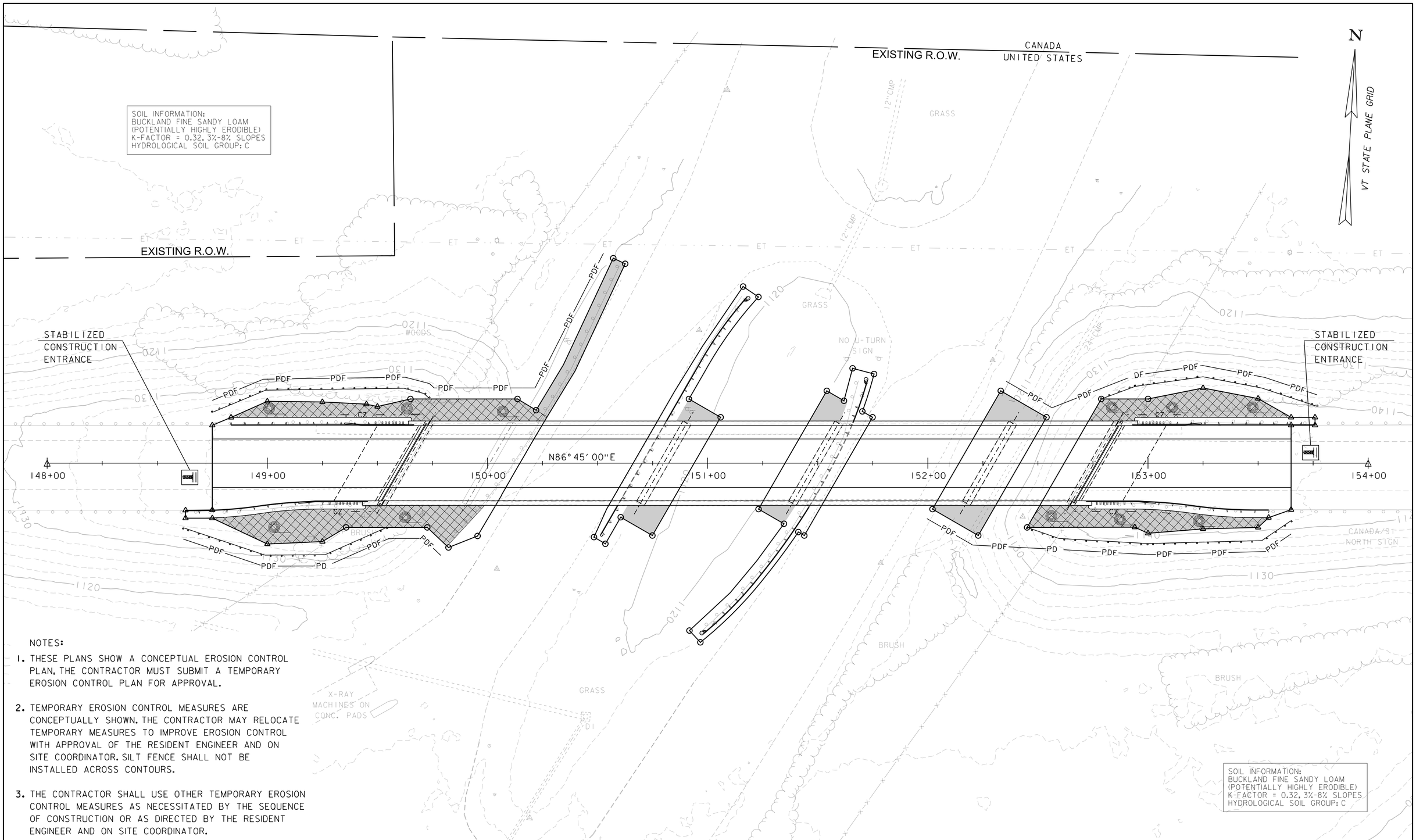

NOTES:

1. THESE PLANS SHOW A CONCEPTUAL EROSION CONTROL PLAN, THE CONTRACTOR MUST SUBMIT A TEMPORARY EROSION CONTROL PLAN FOR APPROVAL.

2. TEMPORARY EROSION CONTROL MEASURES ARE CONCEPTUALLY SHOWN. THE CONTRACTOR MAY RELOCATE TEMPORARY MEASURES TO IMPROVE EROSION CONTROL WITH APPROVAL OF THE RESIDENT ENGINEER AND ON SITE COORDINATOR. SILT FENCE SHALL NOT BE INSTALLED ACROSS CONTOURS.

3. THE CONTRACTOR SHALL USE OTHER TEMPORARY EROSION CONTROL MEASURES AS NECESSITATED BY THE SEQUENCE OF CONSTRUCTION OR AS DIRECTED BY THE RESIDENT ENGINEER AND ON SITE COORDINATOR.

4. REFER TO TEMPORARY EROSION CONTROL DETAIL SHEETS FOR ADDITIONAL DETAILS.

5. EXISTING CONTOURS SHOWN, SEE CROSS SECTIONS FOR FINAL CONDITIONS.

SCALE 1" = 20'-0"
20 0 20

PROJECT NAME: DERBY	
PROJECT NUMBER: IM 091-3(49)	
FILE NAME: s12a274bdrero.dgn	PLOT DATE: 02-JUN-2017
PROJECT LEADER: C. CARLSON	DRAWN BY: G. ROY
DESIGNED BY: D. PETERSON	CHECKED BY: J. LACY
EPSC LAYOUT	SHEET 64 OF 73

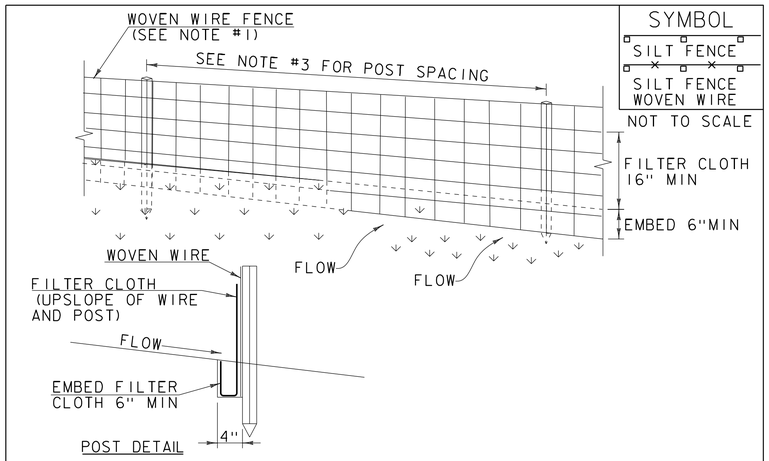

CONSTRUCTION SPECIFICATIONS

1. WOVEN WIRE REINFORCED FENCE IS REQUIRED WITHIN 100' UPSLOPE OF RECEIVING WATERS WHEN THE PROJECT FALLS UNDER A CONSTRUCTION STORMWATER PERMIT. WOVEN WIRE SHALL BE A MIN. 14 GAUGE WITH A 6" MAX. MESH OPENING.
2. FILTER CLOTH SHALL BE EITHER FILTER X, MIRAFI100X, STABILINKA T140N OR APPROVED EQUIVALENT.
3. POST SPACING FOR WIRE-BACKED FENCE SHALL BE 10' MAXIMUM. FOR FILTER-CLOTH FENCE, WHEN ELONGATION IS >50%, POST SPACING SHALL NOT EXCEED 4' AND WHEN ELONGATION IS <50%, POST SPACING SHALL NOT EXCEED 6'.
4. WOVEN WIRE FENCE IS TO BE FASTENED SECURELY TO FENCE POSTS WITH WIRE TIES. FILTER CLOTH IS TO BE FASTENED SECURELY TO WOVEN WIRE FENCE WITH TIES SPACED EVERY 24" AT TOP AND MID SECTION.
5. WHEN TWO SECTIONS OF FILTER CLOTH ADJOIN EACH OTHER THEY SHALL BE OVER-LAPPED BY 6" AND FOLDED.
6. MAINTENANCE SHALL BE PERFORMED AS NEEDED AND MATERIAL REMOVED WHEN SEDIMENT REACHES HALF OF FABRIC HEIGHT.

ADAPTED FROM DETAILS PROVIDED BY: NEW YORK STATE DEC
ORIGINALLY DEVELOPED BY USDA-NRCS
VERMONT DEPARTMENT OF ENVIRONMENTAL CONSERVATION

SILT FENCE

NOTES:
REFER TO "THE VERMONT STANDARDS & SPECIFICATIONS FOR EROSION PREVENTION & SEDIMENT CONTROL -2006- "FROM THE VT AGENCY OF NATURAL RESOURCES FOR ADDITIONAL GUIDANCE.

THIS WORK SHALL BE PERFORMED IN ACCORDANCE WITH SECTION 649 AND AS SHOWN IN THE PLANS FOR GEOTEXTILE FOR SILT FENCE (PAY ITEM 649.51) OR GEOTEXTILE FOR SILT FENCE, WOVEN WIRE REINFORCED (PAY ITEM 649.515).

REVISIONS	
MARCH 21, 2008	WHF
DECEMBER 11, 2008	WHF
JANUARY 13, 2009	WHF

VAOT LOW GROW/FINE FESCUE MIX

LBS/AC						
WEIGHT	BROADCAST	HYDROSEED	NAME	LATIN NAME	GERM	PURITY
38%	57	95	CREEPING RED FESCUE	FESTUCA RUBRA VAR. RUBRA	90%	98%
29%	43.5	72.5	HARD FESCUE	FESTUCA LONGIFOLIA	85%	95%
15%	22.5	37.5	CHEWINGS FESCUE	FESTUCA RUBRA VAR. COMMUTATA	87%	95%
15%	22.5	37.5	ANNUAL RYEGRASS	LOLIUM MULTIFLORUM	90%	95%
3%	4.5	7.5	INERTS			
100%	150	250				

VAOT RURAL AREA MIX

LBS/AC						
WEIGHT	BROADCAST	HYDROSEED	NAME	LATIN NAME	GERM	PURITY
37.5%	22.5	45	CREEPING RED FESCUE	FESTUCA RUBRA VAR. RUBRA	85%	98%
37.5%	22.5	45	TALL FESCUE	FESTUCA ARUNDINACEA	90%	95%
5.0%	3	6	RED TOP	AGROSTIS GIGANTEA	90%	95%
15.0%	9	18	WHITE FIELD CLOVER	TRIFOLIUM REPENS	85%	98%
5.0%	3	6	ANNUAL RYE GRASS	LOLIUM MULTIFLORUM	85%	95%
100%	60	120				

GENERAL AMENDMENT GUIDANCE

FERTILIZER	LIME	
10/20/10	AG LIME	PELLITIZED
500 LBS/AC	2 TONS/AC	1 TONS/AC

CONSTRUCTION GUIDANCE

1. SEED MIX: THE CONTRACTOR SHALL COORDINATE WITH THE RESIDENT ENGINEER ON WHICH SEED MIX TO USE.
2. SEED MIX: USE AS INDICATED IN THE PLANS AND/OR FOR ALL ESTABLISHED UPLAND (NON WETLAND) AREAS DISTURBED BY THE CONTRACTOR.
3. ALL SEED MIXTURES: SHALL NOT HAVE A WEED CONTENT EXCEEDING 0.40% BY WEIGHT AND SHALL BE FREE OF ALL NOXIOUS SEED.
4. FERTILIZER AND LIMESTONE: SHALL FOLLOW RATES SHOWN ON PLAN OR AS DIRECTED BY THE ENGINEER.
5. HAY MULCH: TO BE PLACED ON EARTH SLOPES AT THE RATE OF 2 TONS/ACRE, ACHIEVE 90% GROUND COVER OR AS DIRECTED BY THE ENGINEER.
6. HYDROSEEDING: ALTHOUGH GUIDANCE IS GIVEN ABOVE THE SITE CONDITIONS AND THE TYPE OF HYDROSEED PROPOSED FOR USE WILL ULTIMATELY DICTATE THE AMOUNTS AND TYPES OF SOIL AMENDMENTS TO BE APPLIED.
7. TURF ESTABLISHMENT: PLACING SEED, FERTILIZER, LIME AND MULCH PRIOR TO SEPTEMBER 15 AND AFTER APRIL 15 CAN BETTER ENSURE A VIGOROUS GROWTH OF GRASS.

ADAPTED FROM VTRANS TECHNICAL LANDSCAPE MANUAL FOR ROADWAYS AND TRANSPORTATION FACILITIES

TURF ESTABLISHMENT

THIS WORK SHALL BE PERFORMED IN ACCORDANCE WITH SECTION 651 FOR SEED (PAY ITEM 651.15)

REVISIONS	
JANUARY 12, 2015	WHF

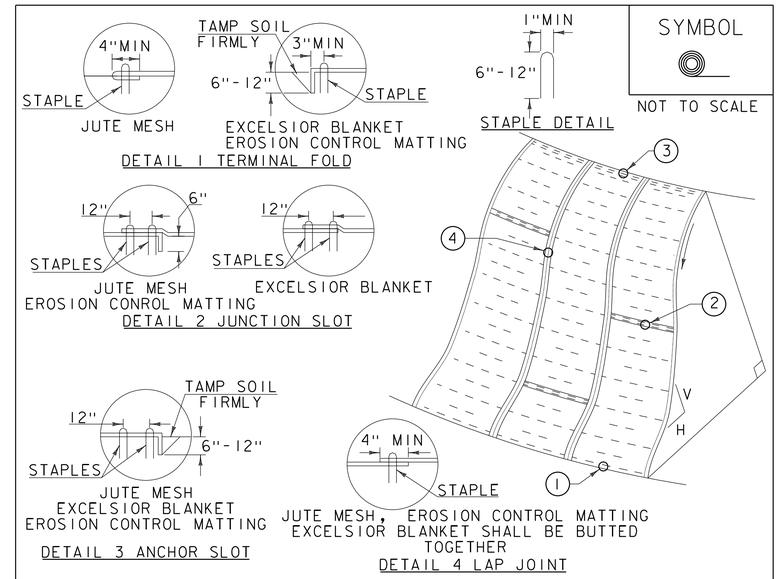

CONSTRUCTION SPECIFICATIONS

1. APPLY TO SLOPES GREATER THAN 3H:1V OR WHERE NECESSARY TO AID IN ESTABLISHING VEGETATION.
2. APPLY FERTILIZER, LIME SEED PRIOR TO PLACING MATTING.
3. STAPLES ARE TO BE PLACED ALTERNATELY, IN COLUMNS APPROXIMATELY 2' APART AND IN ROWS APPROXIMATELY 3' APART. APPROXIMATELY 175 STAPLES ARE REQUIRED PER 4'X225' ROLL OF MATERIAL AND 125 STAPLES ARE REQUIRED PER 4'X150' ROLL OF MATERIAL.
4. DISTURBED AREAS SHALL BE SMOOTHLY GRADED. EROSION CONTROL MATERIAL SHALL BE PLACED LOOSELY OVER GROUND SURFACE. DO NOT STRETCH.
5. ALL TERMINAL ENDS AND TRANSVERSE LAPS SHALL BE STAPLED AT APPROXIMATELY 12" INTERVALS.

ADAPTED FROM DETAILS PROVIDED BY: NEW YORK STATE DEC
ORIGINALLY DEVELOPED BY USDA-NRCS
VERMONT DEPARTMENT OF ENVIRONMENTAL CONSERVATION

ROLLED EROSION CONTROL PRODUCT (RECP) SIDE SLOPE

NOTES:
REFER TO "THE VERMONT STANDARDS & SPECIFICATIONS FOR EROSION PREVENTION & SEDIMENT CONTROL -2006- "FROM THE VT AGENCY OF NATURAL RESOURCES FOR ADDITIONAL GUIDANCE.
THIS WORK SHALL BE PERFORMED IN ACCORDANCE WITH SECTION 653 AND AS SHOWN IN THE PLANS FOR TEMPORARY EROSION MATTING (PAY ITEM 653.20) ~~OR PERMANENT EROSION MATTING (PAY ITEM 653.21).~~

REVISIONS	
APRIL 16, 2007	JMF
JANUARY 13, 2009	WHF

PROJECT NAME: DERBY
PROJECT NUMBER: IM 091-3(49)

FILE NAME: s12a274eroDetails.dgn
PROJECT LEADER: C. CARLSON
DESIGNED BY: D. PETERSON
EPSC DETAILS (1)

PLOT DATE: 02-JUN-2017
DRAWN BY: M. LONGSTREET
CHECKED BY: J. LACY
SHEET 65 OF 73

SYMBOL

NOT TO SCALE

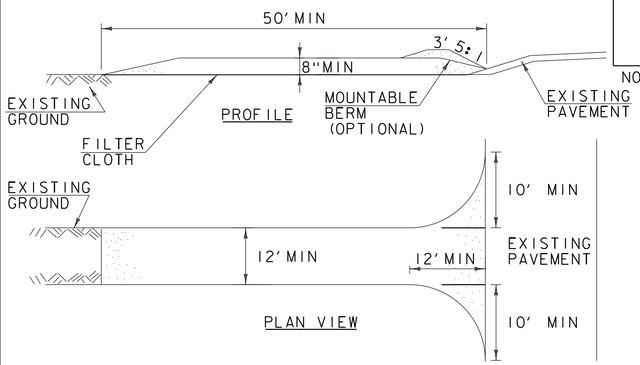

CONSTRUCTION SPECIFICATIONS

1. STONE SIZE- USE 1-4" STONE, RECLAIMED OR RECYCLED CONCRETE EQUIVALENT.
2. LENGTH- NOT LESS THAN 50' (EXCEPT ON A SINGLE RESIDENCE LOT WHERE A 30' MINIMUM LENGTH APPLIES).
3. THICKNESS- NOT LESS THAN 8".
4. WIDTH- 12' MINIMUM, BUT NOT LESS THAN THE FULL WIDTH AT POINTS WHERE INGRESS OR EGRESS OCCURS. 24' IF SINGLE ENTRANCE TO SITE.
5. GEOTEXTILE MUST BE PLACED OVER THE ENTIRE AREA PRIOR TO PLACING STONE.
6. SURFACE WATER- ALL SURFACE WATER FLOWING OR DIVERTED TOWARD CONSTRUCTION ENTRANCES SHALL BE PIPED BENEATH THE ENTRANCE. IF PIPING IS IMPRACTICAL, A MOUNTABLE BERM WITH 5:1 SLOPES WILL BE PERMITTED.
7. MAINTENANCE- THE ENTRANCE SHALL BE MAINTAINED IN A CONDITION WHICH WILL PREVENT TRACKING OR FLOWING OF SEDIMENT ONTO PUBLIC RIGHTS-OF-WAY, ALL SEDIMENT SPILLED, DROPPED, WASHED OR TRACKED ONTO PUBLIC RIGHTS-OF-WAY MUST BE REMOVED IMMEDIATELY.
8. WHEN WASHING IS REQUIRED, IT SHALL BE DONE ON AN AREA STABILIZED WITH STONE AND WHICH DRAINS INTO AN APPROVED SEDIMENT TRAPPING DEVICE.
9. PERIODIC INSPECTION AND NEEDED MAINTENANCE SHALL BE PROVIDED ACCORDING TO PERMIT REQUIREMENTS.

ADAPTED FROM DETAILS PROVIDED BY: NEW YORK STATE DEC
ORIGINALLY DEVELOPED BY USDA-NRCS
VERMONT DEPARTMENT OF ENVIRONMENTAL CONSERVATION

STABILIZED CONSTRUCTION ENTRANCE

NOTES:
REFER TO "THE VERMONT STANDARDS & SPECIFICATIONS FOR EROSION PREVENTION & SEDIMENT CONTROL -2006- "FROM THE VT AGENCY OF NATURAL RESOURCES FOR ADDITIONAL GUIDANCE.

THIS WORK SHALL BE PERFORMED IN ACCORDANCE WITH SECTION 653 FOR VEHICLE TRACKING PAD (PAY ITEM 653.35) OR AS SPECIFIED IN THE CONTRACT.

REVISIONS	
MARCH 24, 2008	WHF
JANUARY 13, 2009	WHF

SYMBOL

NOT TO SCALE

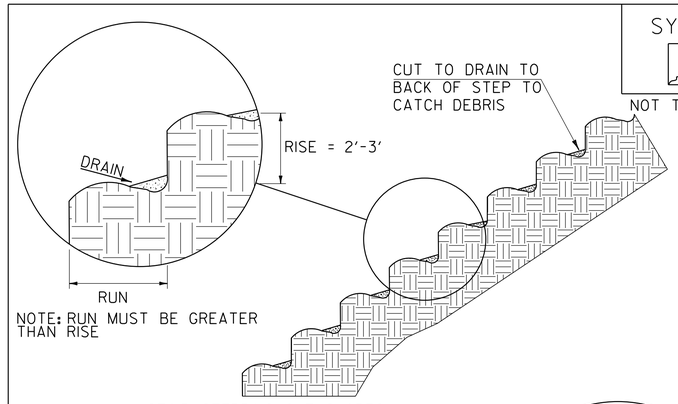

NOTE: RUN MUST BE GREATER THAN RISE

STAIR STEPPING CUT SLOPES

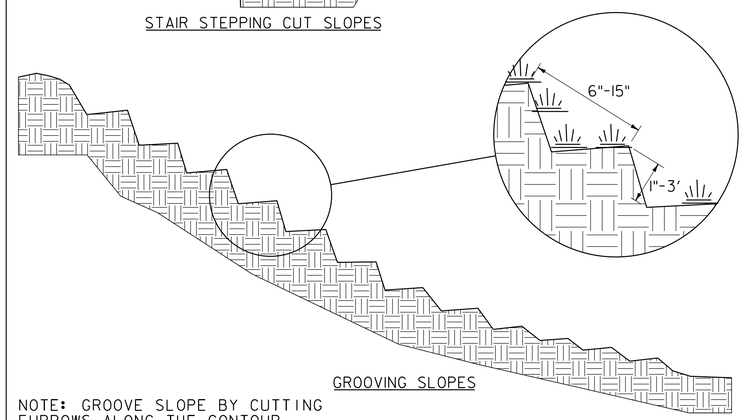

GROOVING SLOPES

NOTE: GROOVE SLOPE BY CUTTING FURROWS ALONG THE CONTOUR. IRREGULARITIES IN THE SOIL SURFACE CATCH RAINWATER AND RETAIN LIME, FERTILIZER AND SEED.

ADAPTED FROM DETAILS PROVIDED BY: NEW YORK STATE DEC
ORIGINALLY DEVELOPED BY USDA-NRCS
VERMONT DEPARTMENT OF ENVIRONMENTAL CONSERVATION

SURFACE ROUGHENING

NOTES:
REFER TO "THE VERMONT STANDARDS & SPECIFICATIONS FOR EROSION PREVENTION & SEDIMENT CONTROL -2006- "FROM THE VT AGENCY OF NATURAL RESOURCES FOR ADDITIONAL GUIDANCE.

THIS WORK SHALL BE CONSIDERED INCIDENTAL TO THE CONTRACT

REVISIONS	
APRIL 1, 2008	WHF
JANUARY 13, 2009	WHF

PROJECT NAME: DERBY
PROJECT NUMBER: IM 091-3(49)

FILE NAME: s12a274eroDetails.dgn
PROJECT LEADER: C. CARLSON
DESIGNED BY: D. PETERSON
EPSC DETAILS (2)

PLOT DATE: 02-JUN-2017
DRAWN BY: M. LONGSTREET
CHECKED BY: J. LACY
SHEET 66 OF 73

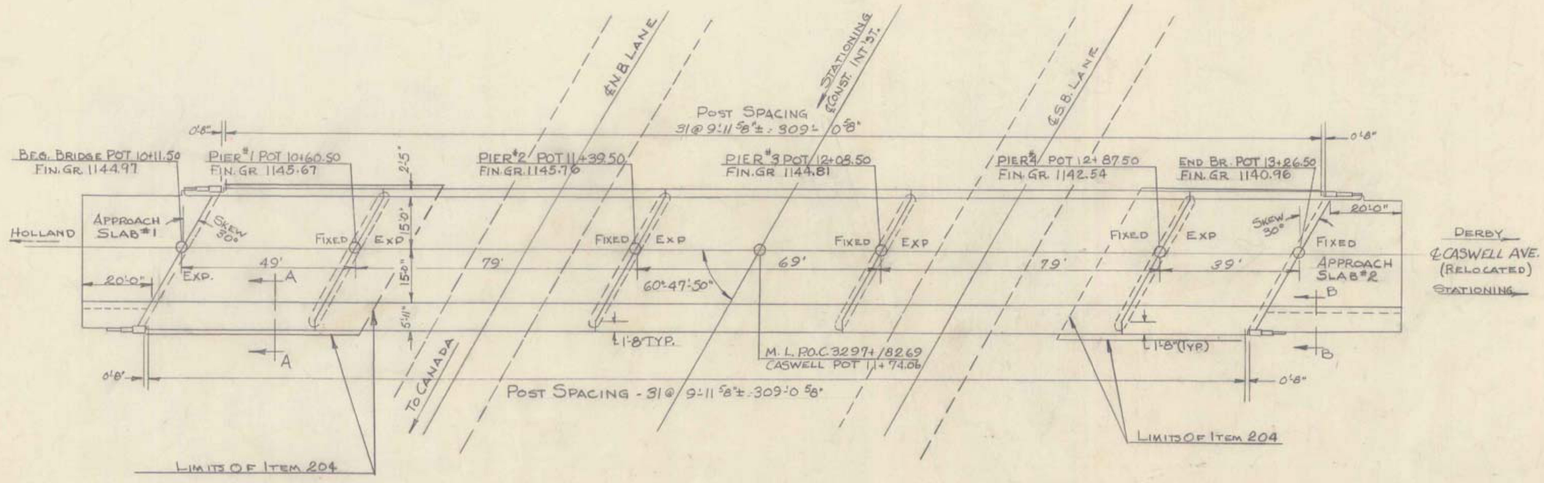

PLAN VIEW
SCALE 1" = 20'

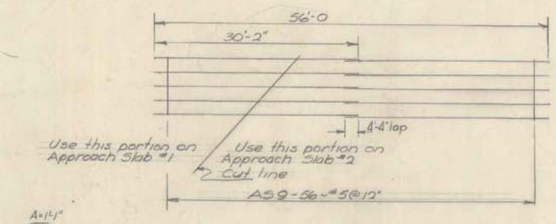

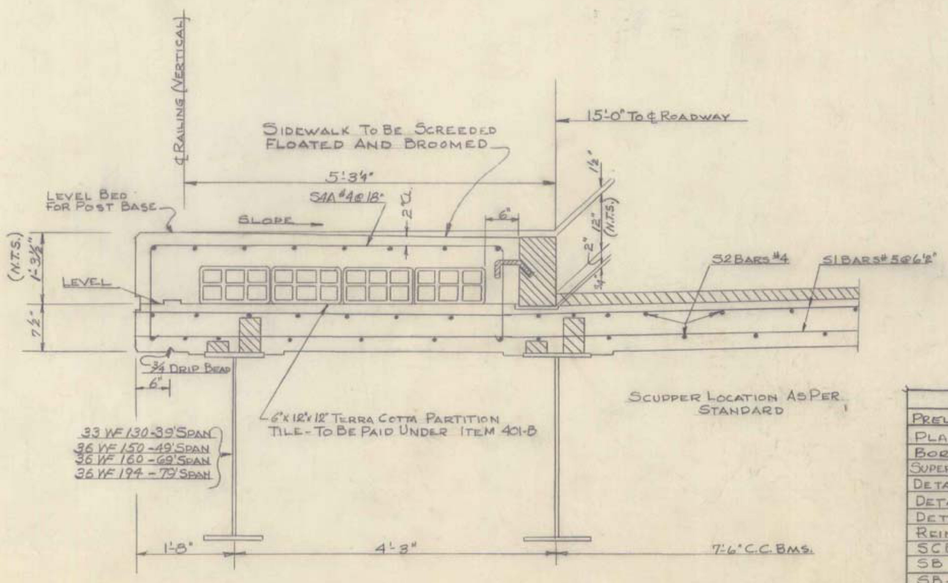

SECTION A-A
SCALE 1" = 1'-0"

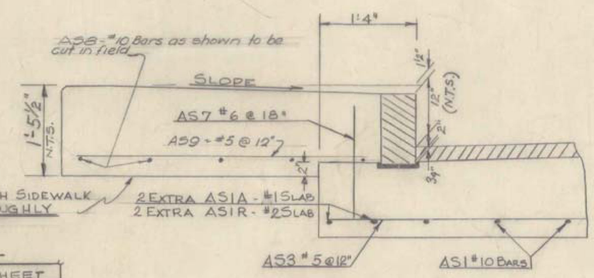

SECTION B-B
SCALE 1" = 1'-0"

NOTE:
EARTH BENEATH SIDEWALK MUST BE THOROUGHLY COMPACTED.

-LIST OF SHEETS-

TITLE	SHEET
PRELIM. INFO. SHEET	B22
PLAN & ELEVATION	B23
BORINGS	B24
SUPERSTR. & APPR. SLAB DET.	B25
DETAILS OF ABUT. 1 & 2	B26
DETAILS OF PIERS 1 & 4	B27
DETAILS OF PIERS 2 & 3	B28
REINF. STEEL SCHEDULE	B29-B30
SCB-30-60 (MOD)	B8
SB-AS-30° SKEW 57	B31
SB-55-58	B32
SB-20-60	B10
SB-22-60	B11
E-2	B12
SCB-D-60	B33

KB

ITEM NO.	ITEM	UNIT	NET	OVERRUN	TOTAL	FINAL
318	Tar Emulsion for Bridge Floors	Gals	~~419~~	—	~~419~~	*
361-B	Bituminous Concrete Pave (Mod)	Tons	~~117~~	~~75~~	~~192~~	*
401-B	Concrete Class B (Mod)	C.Y.	~~372~~	~~19~~	~~391~~	439
403	Spiral Reinforcement (8160)	L.S.	1 ✓	—	1 ✓	1
404-A	Structural Steel	LB.	~~354,877~~	~~7,078~~	~~361,955~~	412,809
556-C	Granite Bridge Curb	L.F.	~~630~~	—	~~630~~	631
572	Bridge Railing	L.F.	~~619~~	—	~~619~~	620

APPROACH SLAB 1 & 2

ITEM NO.	ITEM	UNIT	NET	OVERRUN	TOTAL	FINAL
401-B	Concrete Class B (Mod)	C.Y.	~~80~~	~~4~~	84 ✓	84
361-B	Bituminous Concrete Pave (Mod)	Tons	~~21~~	~~3~~	~~24~~	*
556-C	Granite Bridge Curb	L.F.	~~73~~	—	~~73~~	76
318	Tar Emulsion for Bridge Floors	Gals.	~~79~~	—	~~79~~	*

TOTAL BRIDGE QUANTITIES

ITEM NO.	ITEM	UNIT	NET	OVERRUN	TOTAL	FINAL
107	Structure Excavation	C.Y.	~~859~~	~~54~~	~~913~~	1,053
204	Sub-Base of Crushed Rock (Mod)	C.Y.	~~166~~	~~17~~	~~183~~	139
361-B	Bituminous Concrete Pave (Mod)	Tons	~~438~~	~~24~~	~~462~~	*
401-B	Concrete Class B (Mod)	C.Y.	~~878~~	~~45~~	~~923~~	950
402	Reinforcing Steel	LB.	~~143,636~~	—	~~143,636~~	150,034
403	Spiral Reinforcement (8160)	L.S.	1 ✓	—	1 ✓	1
404A	Structural Steel	LB.	~~354,877~~	~~7,078~~	~~361,955~~	412,809
407	Asphaltic-Asb. Coating	S.Y.	86 ✓	—	86 ✓	86
501	Furn. Equip. For Driving Piles	L.S.	REQUIRED			1/2
503	Splices For Steel Piling	EA.	~~4~~	—	~~4~~	33
504	Steel Piling	L.F.	~~660~~	—	~~660~~	1,144
556-C	Granite Bridge Curb	L.F.	~~703~~	—	~~703~~	727
572	Bridge Railing	L.F.	~~619~~	—	~~619~~	620
318	Tar Emulsion for Bridge Floors	Gals.	~~498~~	—	~~498~~	*
372	Joint Sealer - Hot Poured Elastic Type	L.F.	~~205~~	—	~~205~~	*
222	Gravel Backfill	C.Y.	0		0	33

GENERAL NOTES

1. Superstructure Designed As Per SCB-30-60 (Mod.) As Shown, & SCB-D-60
2. Railing Designed As Per SB-55-58
3. Approach Slab Designed As Per SB-AS-30-57 Mod. As Shown.

Revised: 7/24/61 - Reinforcing steel in Approach Slab Sidewalks.

STATE OF VERMONT
DEPARTMENT OF HIGHWAYS

TOWN OF DERBY
ROUTE NO. I 91 LOG STA.
SUPERSTRUCTURE & APPROACH SLAB DETAILS (CASWELL AVENUE)
SCALE AS SHOWN
SURVEYED BY Sheet B25

DERBY IM 091-3 (49)
REFERENCE SHEET 1 OF 7
PLANS SHEET 67 OF 73

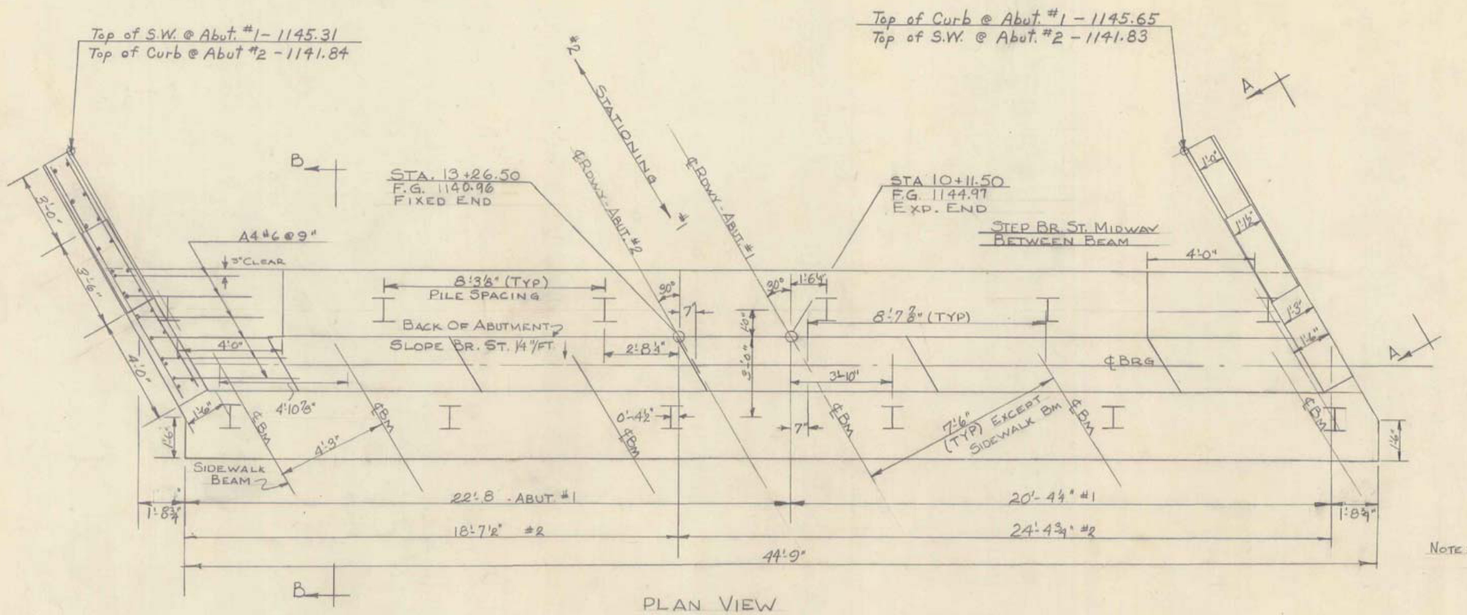

PLAN VIEW

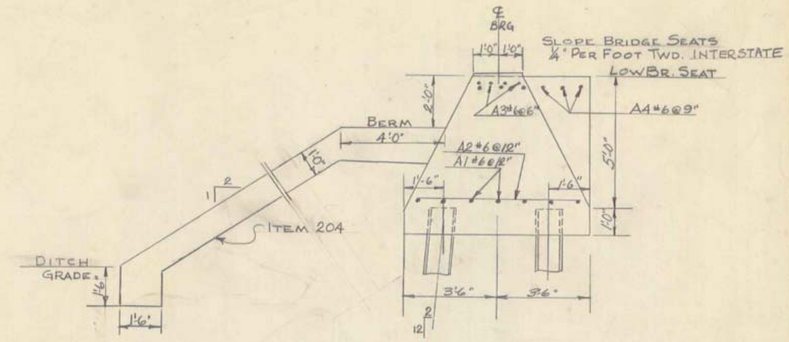

SECTION B-B

NOTE: BEAMS HAVE BEEN DRAWN AS VIEWED ON ABUT. #1. SIDEWALK APPEARS ON OPP. SIDE WHEN VIEWING ABUT. 2

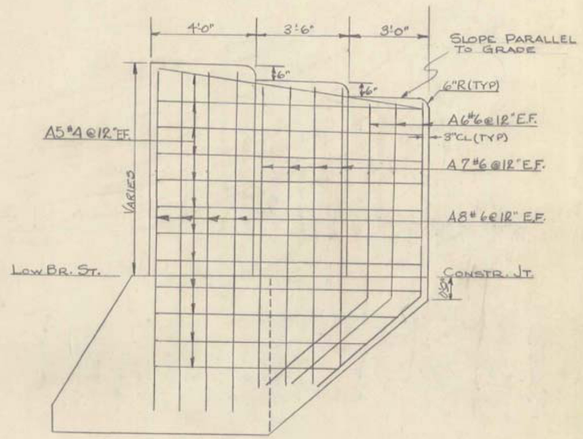

SECTION A-A

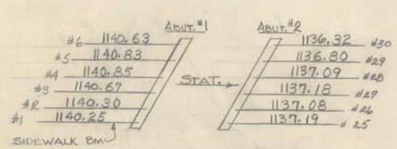

BRIDGE ST. ELEVATIONS

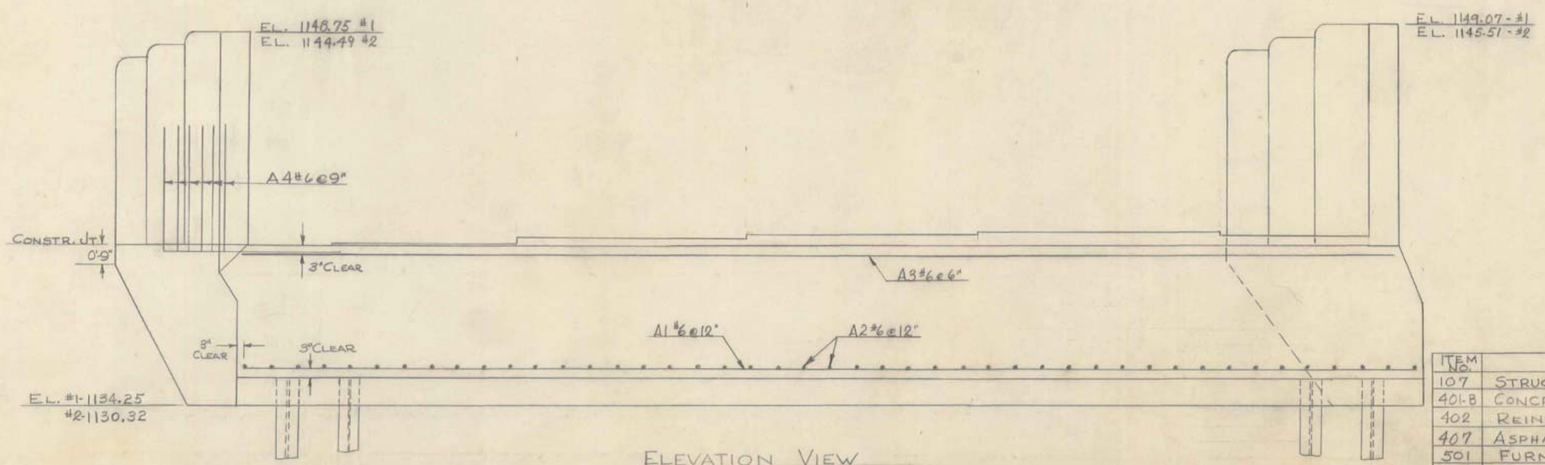

ELEVATION VIEW

NOTES.
1. BR. ST. EL. ARE FOR ℄ BEARING
2. COAT EXPOSED BR. ST. WITH ITEM 407-½" THICK
3. PILES - 12 BP 53 - EST. LNTH #1 - 30' #2 - 25'

AB

ITEM No.	ITEM	UNIT	NET	OVER	TOTAL	FINAL
107	STRUCTURE EXCAVATION	C.Y.	~~24~~	~~2~~	~~26~~	33
401-B	CONCRETE CLASS B (MOD)	C.Y.	~~120~~	~~6~~	126 ✓	126
402	REINFORCING STEEL	L.B.	(SEE STEEL SCHED.)			
407	ASPHALTIC-ASB. COATING	S.Y.	10 ✓	–	10 ✓	10
501	FURN. EQUIP. FOR DRIV. PILES	L.S.	~~1~~	–	~~1~~	1/2
503	SPLICES FOR STEEL PILING	EA.	~~4~~	–	~~4~~	33
504	STEEL PILING	L.F.	~~660~~	–	~~660~~	1,144
209	SUB BASE OF CRUSHED ROCK (MOD)	C.Y.	~~166~~	~~17~~	~~183~~	139

STATE OF VERMONT
DEPARTMENT OF HIGHWAYS

TOWN OF DERBY
ROUTE NO. I-91 LOG STA.
DETAILS OF ABUT. #1 & #2
(CASWELL AVENUE)
SCALE 3/8" = 1'-0"
SURVEYED BY Sheet 18-26

DERBY IM 091-3 (49)
REFERENCE SHEET 2 OF 7
PLANS SHEET 68 OF 73

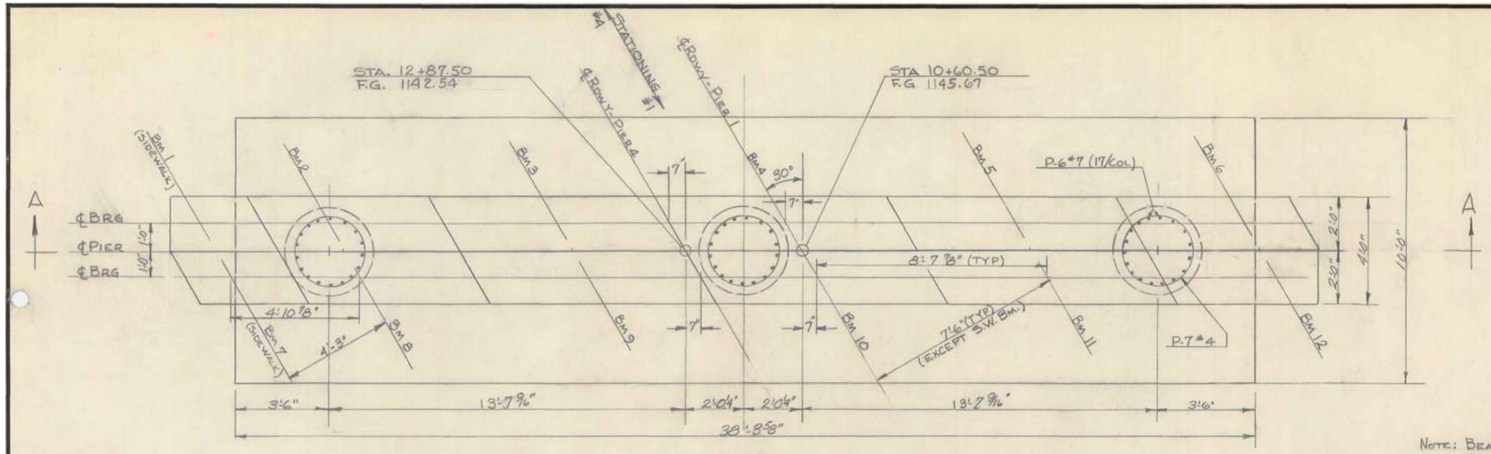

PLAN VIEW

NOTE: BEAMS ARE SHOWN FOR PIER 1. SIDEWALK APPEARS ON OPPOSITE SIDE WHEN VIEWING PIER 4.

BM 6	1141.20	1141.02	BM 12
5	1141.45	1141.26	11
4	1141.51	1141.32	10
3	1141.36	1141.19	9
2	1141.04	1140.86	8
BM 1	1141.01	1140.83	BM 7

PIER 1

BM 24	1137.66	1137.87	BM 30
23	1138.10	1138.32	29
22	1138.36	1138.58	28
21	1138.42	1138.63	27
20	1138.30	1138.52	26
BM 19	1138.38	1138.60	BM 25

PIER 4

BRIDGE SEAT ELEVATIONS

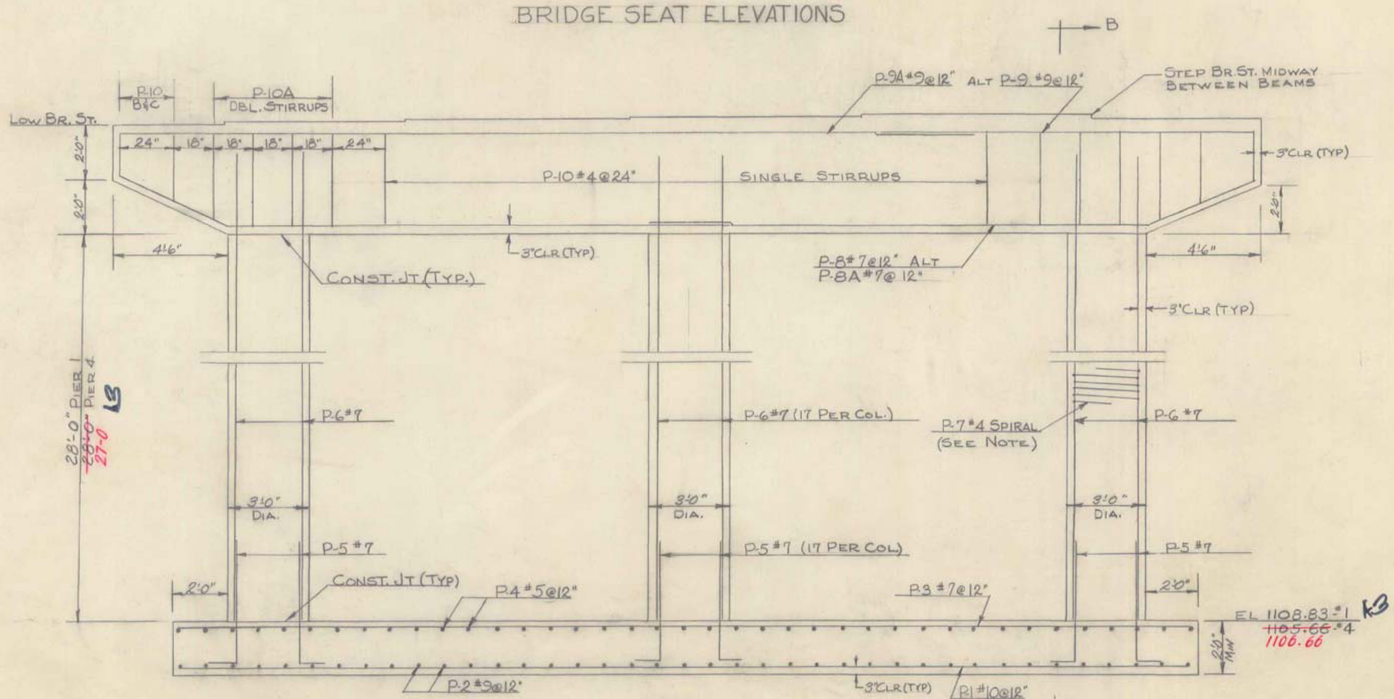

SECTION A-A

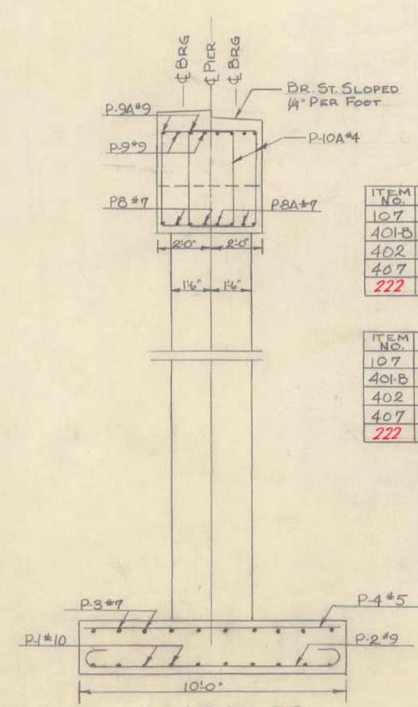

SECTION B-B

NOTES:
1. BR. ST. EL. ARE FOR ℄ BEARING
2. COAT EXPOSED BR. ST. WITH ITEM 407. 1/2" THICK
3. SPIRAL LAPS TO BE 1 1/2 TURNS CONTINUOUSLY WELDED WITH 1/4" WELD. SPIRAL PITCH - 3"

PIER 1

KB

ITEM NO.	ITEM	UNIT	NET	OVERRUN	TOTAL	FINAL
107	STRUCTURE EXCAVATION	C.Y.	~~197~~	~~20~~	~~217~~	240
401-B	CONCRETE CLASS B(MOD)	C.Y.	~~76~~	~~4~~	~~80~~	77
402	REINFORCING STEEL	LB.	(SEE STEEL SCHEDULE)			
407	ASPHALTIC-ASB. COATING	S.Y.	19	-	19	19
222	Gravel Backfill	c.y.	0		0	14

PIER 4

KB

ITEM NO.	ITEM	UNIT	NET	OVERRUN	TOTAL	FINAL
107	STRUCTURE EXCAVATION	C.Y.	~~215~~	~~22~~	~~237~~	240
401-B	CONCRETE CLASS B(MOD)	C.Y.	~~76~~	~~4~~	~~80~~	79
402	REINFORCING STEEL	LB.	(SEE STEEL SCHEDULE)			
407	ASPHALTIC-ASB. COATING	S.Y.	19	-	19	19
222	Gravel Backfill	c.y.	0		0	3

STATE OF VERMONT
DEPARTMENT OF HIGHWAYS

TOWN OF DERBY
ROUTE NO. I 91 LOG STA.
DETAILS OF PIERS 1 & 4
(CASWELL AVENUE)
SCALE 3/8" = 1'-0"
SURVEYED BY Sheet 13-27

DERBY IM 091-3 (49)
REFERENCE SHEET 3 OF 7
PLANS SHEET 69 OF 73

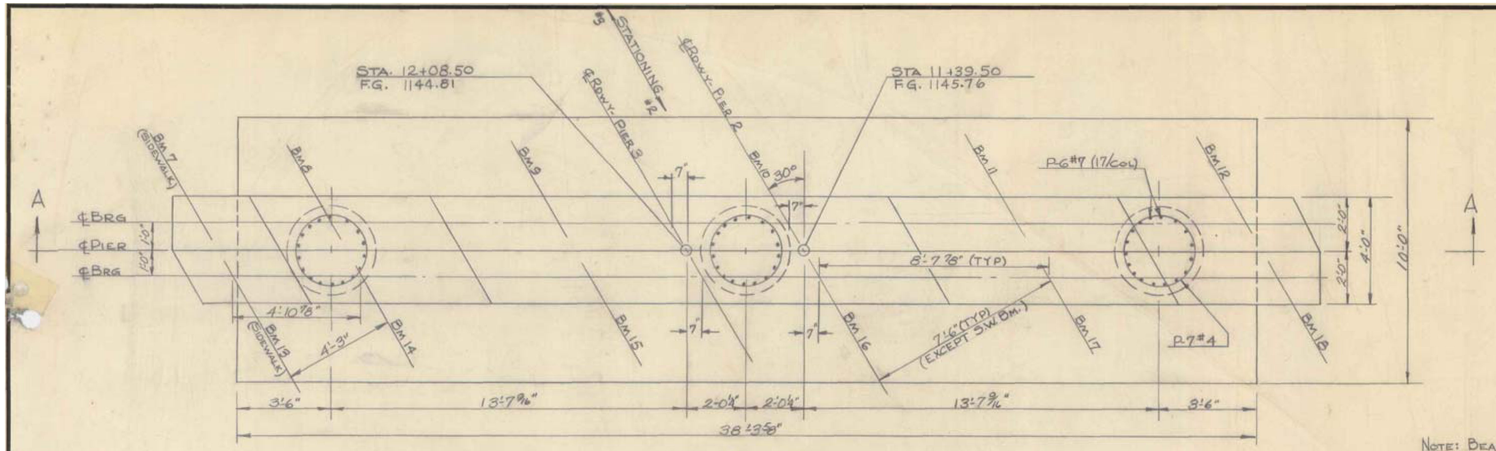

PLAN VIEW

NOTE: BEAMS ARE SHOWN FOR PIER 2. SIDEWALK APPEARS ON OPPOSITE SIDE WHEN VIEWING PIER 3

BM 12	1141.10	1141.13	BM 18
11	1141.41	1141.45	17
10	1141.53	1141.57	16
9	1141.47	1141.51	15
8	1141.20	1141.25	14
BM 7	1141.21	1141.26	BM 13

PIER 2

BM 18	1140.10	1139.88	BM 24
17	1140.48	1140.26	23
16	1140.67	1140.45	22
15	1140.65	1140.44	21
14	1140.46	1140.24	20
BM 13	1140.50	1140.28	BM 19

PIER 3

BRIDGE SEAT ELEVATIONS

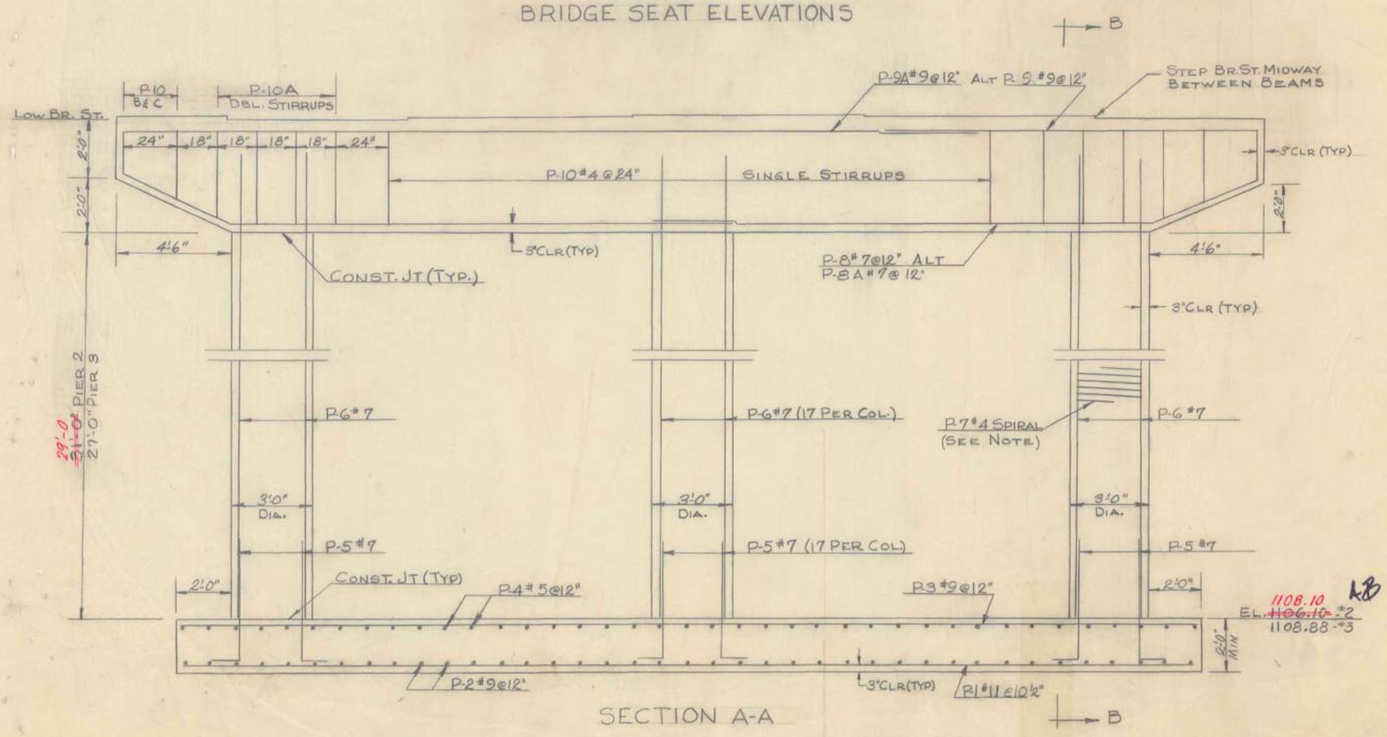

SECTION A-A

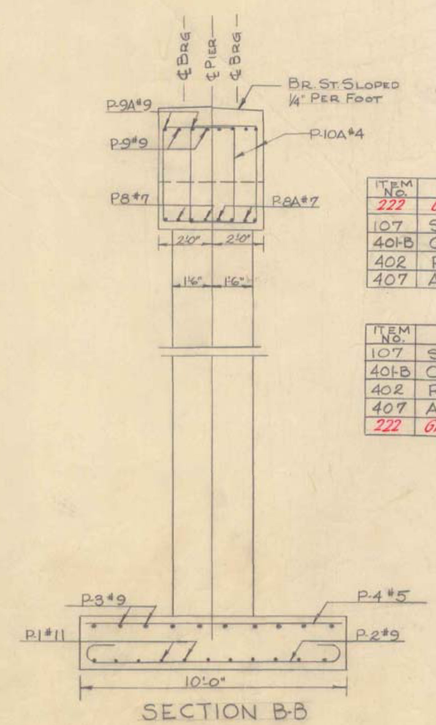

SECTION B-B

NOTES:
1. BR. ST. EL. ARE FOR ℄ BEARING.
2. COAT EXPOSED BR. ST. WITH ITEM 407. 1/8" THICK
3. SPIRAL LAPS TO BE 1 1/2 TURNS CONTINUOUSLY WELDED WITH 1/4" WELD. SPIRAL PITCH 3"

PIER 2 ALL LB

ITEM NO.	ITEM	UNIT	NET	OVERRUN	TOTAL	FINAL
222	Gravel Backfill	C.Y.	0		0	5
107	STRUCTURE EXCAVATION	C.Y.	~~215~~	~~22~~	~~237~~	270
401-B	CONCRETE CLASS B (MOD)	C.Y.	~~79~~	~~4~~	~~83~~	77
402	REINFORCING STEEL	LB.	(SEE STEEL SCHEDULE)			
407	ASPHALTIC-ASB. COATING	S.Y.	19	–	19	19

PIER 3

ITEM NO.	ITEM	UNIT	NET	OVERRUN	TOTAL	FINAL
107	STRUCTURE EXCAVATION	C.Y.	~~179~~	~~18~~	~~197~~	261
401-B	CONCRETE CLASS B (MOD)	C.Y.	~~75~~	~~4~~	~~79~~	77
402	REINFORCING STEEL	LB.	(SEE STEEL SCHEDULE)			
407	ASPHALTIC-ASB. COATING	S.Y.	19	–	19	19
222	Gravel Backfill	C.Y.	0		0	11

STATE OF VERMONT
DEPARTMENT OF HIGHWAYS

TOWN OF DERBY
ROUTE NO. I91 LOG STA.
DETAILS OF PIERS 2 & 3
(CASWELL AVENUE)
SCALE 3/8" = 1'-0"
SURVEYED BY Sheet 6-28

DERBY IM 091-3 (49)
REFERENCE SHEET 4 OF 7
PLANS SHEET 70 OF 73

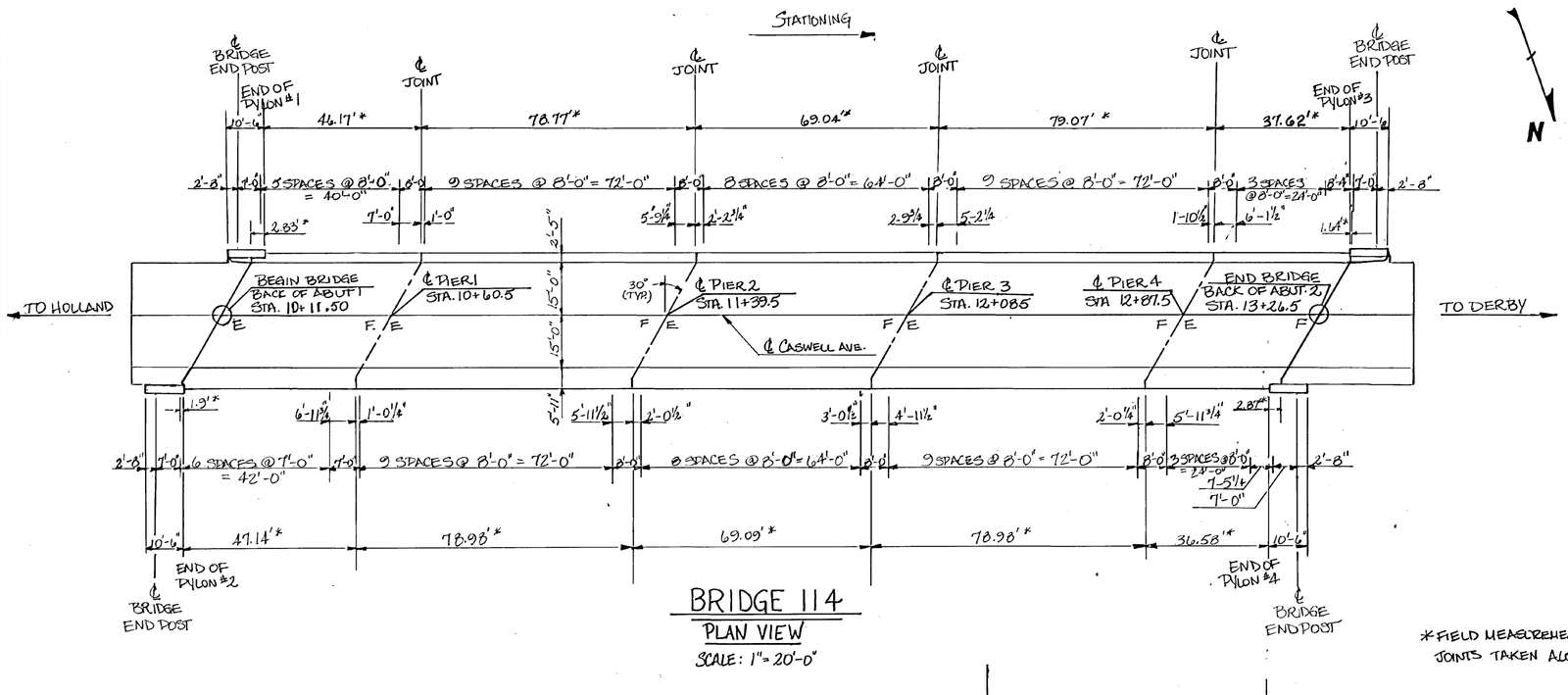

BRIDGE 114
PLAN VIEW
SCALE: 1" = 20'-0"

THE ALUMINUM APPROACH RAILING SHALL BE INSTALLED SO AS TO PROVIDE A SMOOTH TRANSITION, BOTH LATERALLY AND VERTICALLY, FROM THE FACE OF THE NEW ALUMINUM BRIDGE RAIL TO THE FACE OF THE EXISTING STEEL BEAM GUARD RAIL. THIS TRANSITION, IF REQUIRED, SHALL BE ACCOMPLISHED WITHIN THE PAY LIMITS OF THE ALUMINUM APPROACH RAILING.

PAYMENT FOR THE NEW STEEL BEAM GUARD RAIL WILL INCLUDE THE NEW POST WITH OFFSET BLOCK AND CUTTING AND REDRILLING THE EXISTING STEEL BEAM AS REQUIRED. A FACTOR OF 1.4 WAS USED TO COMPUTE THE QUANTITY.

*FIELD MEASUREMENT OF ℄ SUPERSTRUCTURE. JOINTS TAKEN ALONG FACE OF RAIL.

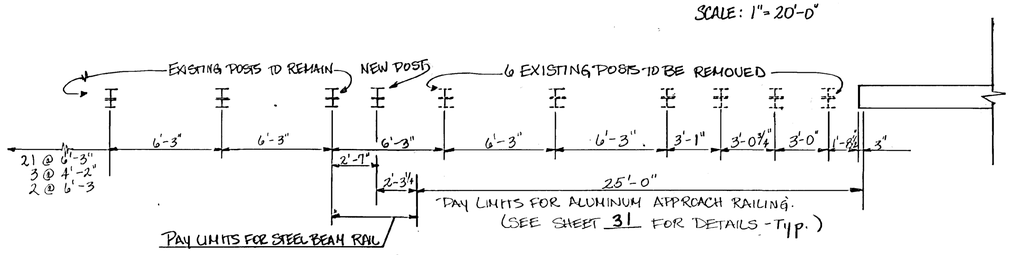

ABUTMENT 1
SCALE: 1/4" = 1'-0"

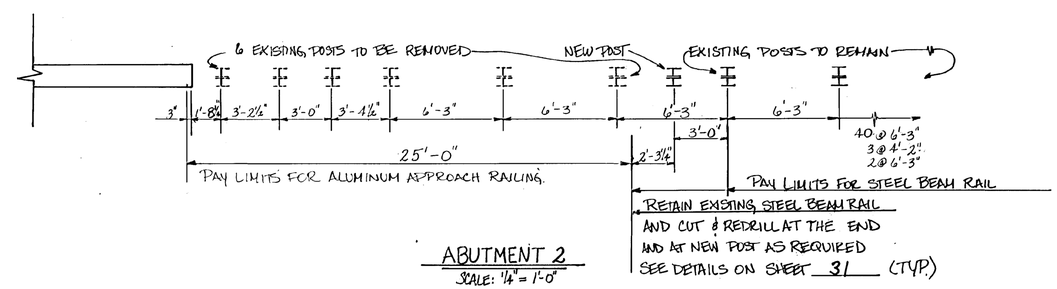

ABUTMENT 2
SCALE: 1/4" = 1'-0"

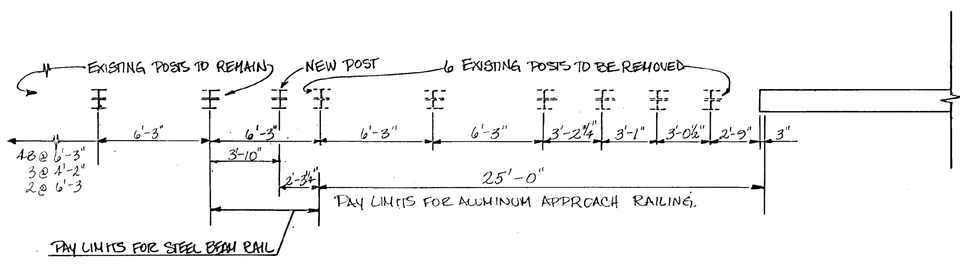

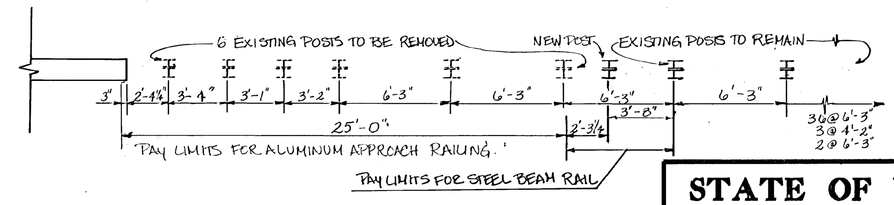

= EXISTING POST TO BE REMOVED

STATE OF VERMONT
AGENCY OF TRANSPORTATION

Town Of DERBY	Bridge No. 114
Highway No. I-91	Log Sta. 3297+82.69 / Surv. Sta. —
CASWELL AVENUE (TH 1) OVER I-91	
BRIDGE AND APPROACH RAILING LAYOUTS	
Designed By S. GUNN	Drawn By S. GUNN
Checked By G.S. ROGERS Date 8-90	Bridge Design Supervisor D.E. LATHROP Date 8-90

DERBY IM 091-3 (49)
REFERENCE SHEET 5 OF 7
PLANS SHEET 71 OF 73

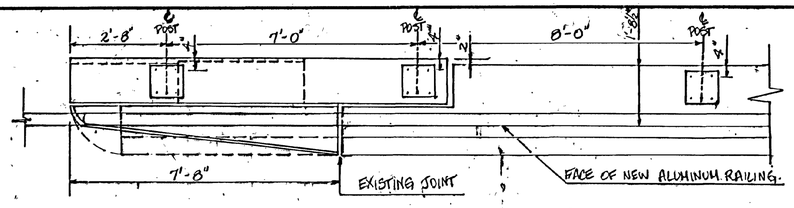

ALUMINUM RAIL POST SPACING ON WINGWALL (PYLON) 1

SCALE: 1/2" = 1'-0"

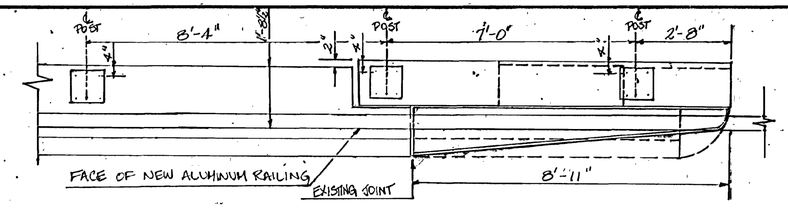

ALUMINUM RAIL POST SPACING ON WINGWALL (PYLON) 3

SCALE: 1/2" = 1'-0"

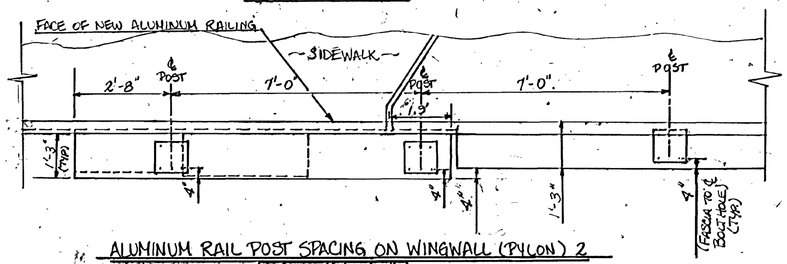

ALUMINUM RAIL POST SPACING ON WINGWALL (PYLON) 2

SCALE: 1/2" = 1'-0"

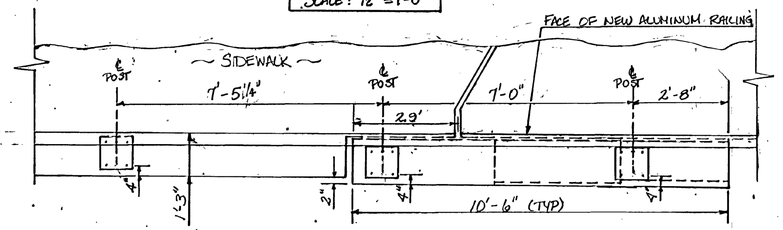

ALUMINUM RAIL POST SPACING ON WINGWALL (PYLON) 4

SCALE 1/2" = 1'-0"

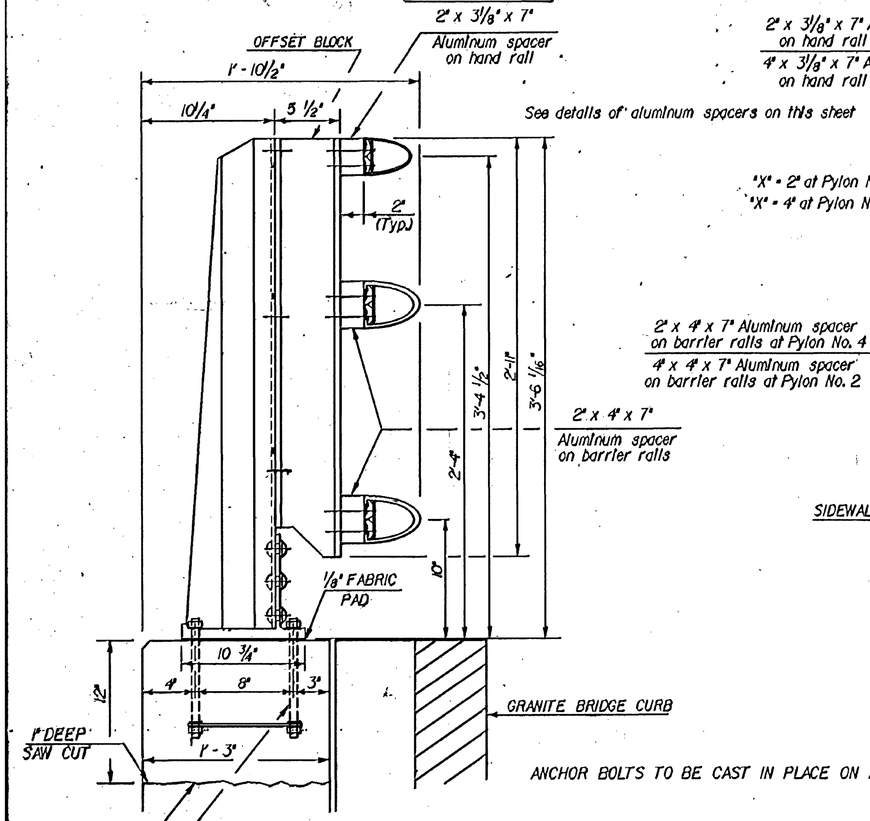

ANCHOR BOLTS TO BE CAST IN PLACE ON ALL FOUR PYLONS

SIDE ELEVATION OF THREE RAIL TO BE USED ON PYLONS NO. 1 & 3 ON CURB SIDE

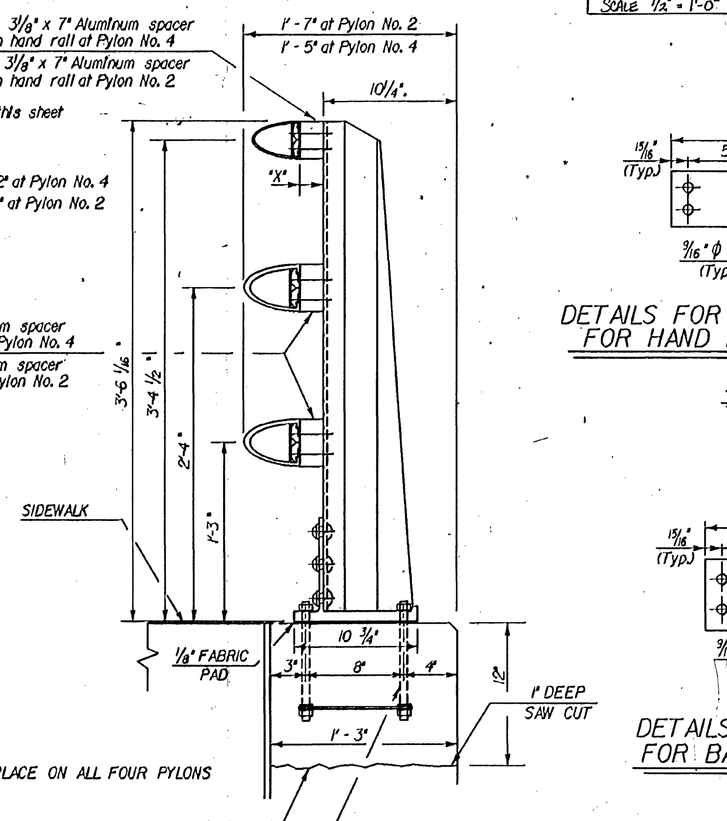

SIDE ELEVATION OF THREE RAIL TO BE USED ON PYLONS NO. 2 & 4 ON SIDEWALK SIDE

"B" = 2" for Pylons No. 1, 3 & 4
"B" = 4" for Pylon No. 2

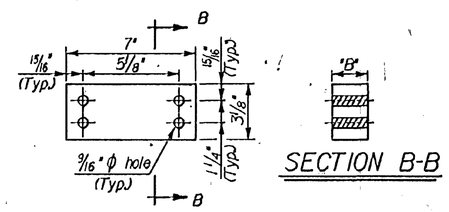

DETAILS FOR ALUMINUM SPACERS FOR HAND RAILS ON PYLONS

3" = 1'-0"

"A" = 2" for Pylons No. 1, 3 & 4
"A" = 4" for Pylon No. 2

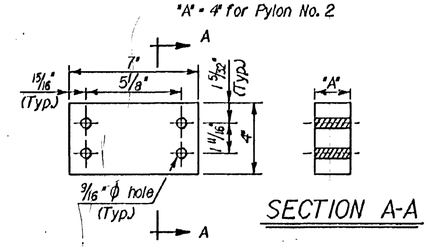

DETAILS FOR ALUMINUM SPACERS FOR BARRIER RAILS ON PYLONS

3" = 1'-0"

NOTES FOR PYLON REMOVAL & BRIDGE RAIL REPLACEMENT ON BR. 114

1. ALL CONCRETE USED TO CAP WINGWALLS AFTER PYLON REMOVAL AND FOR NEW FLARED END CURB DETAIL WILL BE "CONCRETE, CLASS A".
2. PYLONS SHALL BE REMOVED TO ONE FOOT (1') BELOW EXISTING SUPERSTRUCTURE CURB GRADE, AND REPLACED TO ELEVATION OF TOP OF EXISTING SUPERSTRUCTURE CURB GRADE.
3. REMOVAL OF ALL CONCRETE PYLONS TO THE LIMITS SHOWN AND REMOVAL OF THE GRANITE END BLOCKS, GRANITE CURB, AND CONCRETE CURB TO THE LIMITS SHOWN ON THE SOUTHERN SIDE SHALL BE PAID FOR AS THE ITEM "PARTIAL REMOVAL OF STRUCTURE".
4. WHEN REMOVING THE EXISTING PYLONS, RETAIN THE EXISTING VERTICAL REINFORCING STEEL AND CUT AS DETAILED.
5. THE EXISTING CONCRETE SHALL BE THOROUGHLY COATED WITH NEAT CEMENT GROUT BEFORE PLACING NEW CONCRETE, AS PER SUBSECTION 501.13(b).
6. CONCRETE AT THE JOINTS SHALL BE CLEANED AND PREPARED AS PER SUBSECTION 524.05(b) PRIOR TO PLACING POLYURETHANE JOINT SEALER.
7. NEW BRIDGE RAILING POSTS SHALL BE SET NORMAL TO GRADE.
8. FOR BRIDGE RAILING DETAILS, APPROACH RAIL DETAILS AND RELATED NOTES, SEE SHEETS 29→31.
9. NO SURVEY WAS TAKEN ON THIS PROJECT. THEREFORE, THE CONTRACTOR SHALL FIELD CHECK THE END TO END OF PYLON DIMENSIONS (ALONG FACE OF RAIL) AND LOCATION OF JOINTS OVER PIERS PRIOR TO SUBMISSION OF SHOP DETAILS FOR APPROVAL.
10. THE EXISTING BRIDGE RAILING, POSTS AND HARDWARE SHALL REMAIN THE PROPERTY OF THE STATE OF VERMONT. SEE SPECIFIC NOTE 11.
11. RAILING JOINT SPLICES SHALL BE LOCATED AT ALL SUPERSTRUCTURE JOINTS. THE BRIDGE RAILING JOINT OPENING SHALL BE A MINIMUM OF 1 INCH.
12. NEW CORK EXPANSION MATERIAL SHALL BE SUBSIDIARY TO THE ITEM "CONCRETE, CLASS A".
13. MINIMUM COVER FOR REINFORCING STEEL IN PYLON CAPS SHALL BE THREE (3) INCHES.
14. ALL EXPOSED EDGES OF CONCRETE SHALL BE CHAMFERED 1" BY 1".
15. NOT USED.
16. FOR POST DETAILS AND RELATED NOTES NOT SHOWN ON THIS SHEET, SEE SHEETS 29→31.
17. NEW 3/4" ϕ ANCHOR BOLTS USED ON THE SUPERSTRUCTURE ARE TO BE GROUTED IN PLACE AND SHALL BE FURNISHED WITH ONE (1) NUT AND ONE (1) WASHER. NEW ANCHOR BOLTS ON THE WINGWALLS ARE TO BE CAST IN THE NEW CONCRETE, USING THE POST ANCHOR ASSEMBLY AS SHOWN ON SHEET 30. THE POSTS ARE TO BE SET SO THAT THE FACE OF RAIL ALIGNS WITH THE FACE OF RAIL ON THE SUPERSTRUCTURE. ANCHOR BOLTS, NUTS, WASHERS AND ANCHOR PLATES SHALL BE FURNISHED EITHER UNDER THE ITEM BRIDGE RAILING - 3 RAIL ALUMINUM OR THE ITEM BRIDGE RAILING - ALUMINUM/PEDESTRIAN.
18. THE DRILLING AND GROUTING OF NEW ANCHOR BOLTS SHALL SUBSIDIARY TO EITHER THE ITEM BRIDGE RAILING - 3 RAIL ALUMINUM OR THE ITEM BRIDGE RAILING - ALUMINUM/PEDESTRIAN. DRILL HOLES SHALL BE 1 3/4" ϕ. NEW ANCHOR BOLTS SHALL BE GROUTED IN WITH EPOXY MORTAR (VT. SPEC. 719.01).

RAILING NOTES (CONT'D.)

19. A MINIMUM PULLOUT STRENGTH OF 20,000 LBS. SHALL BE ATTAINED ON THE NEW BOLTS THAT ARE GROUTED IN PLACE. A SAMPLE GROUTED BOLT WILL BE TESTED BEFORE MATERIALS ARE APPROVED FOR USE, AND THEN RANDOM BOLTS WILL BE FIELD TESTED BY THE STATE OF VERMONT TO INSURE THIS STRENGTH IS BEING ATTAINED.

STATE OF VERMONT
AGENCY OF TRANSPORTATION

Town Of	DERBY	Bridge No.	114
Highway No.	TH 1	Log Sta. / Surv. Sta.	
Caswell Avenue over I 91			
Bridge Railing, Post and Curb Details			
Designed By G.S.Rogers		Drawn By D.W.Newton	
Checked By G.S.Rogers	Date Sept.'90	Bridge Design Supervisor D.E. Lathrop	Date Sept.'90

DERBY IM 091-3 (49)
REFERENCE SHEET 6 OF 7
PLANS SHEET 72 OF 73

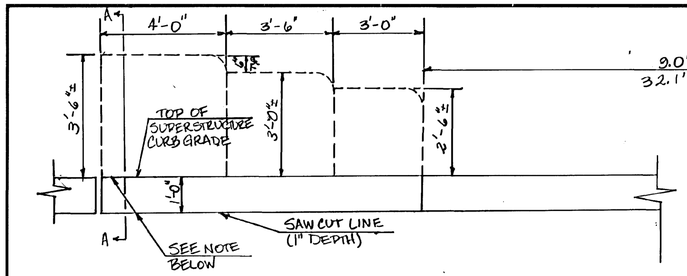

DETAILS FOR PARTIAL REMOVAL OF PYLONS - ELEVATION VIEW FROM NORTH FASCIA

SCALE: NTS

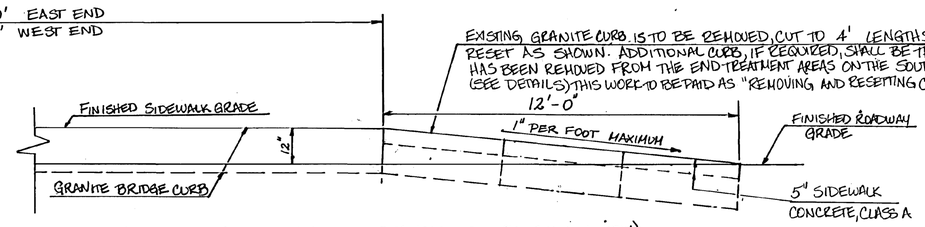

END OF SIDEWALK DETAILS - NORTHWEST END (ELEVATION VIEW)

(NORTHEAST END OPPOSITE HAND)

SCALE: NTS

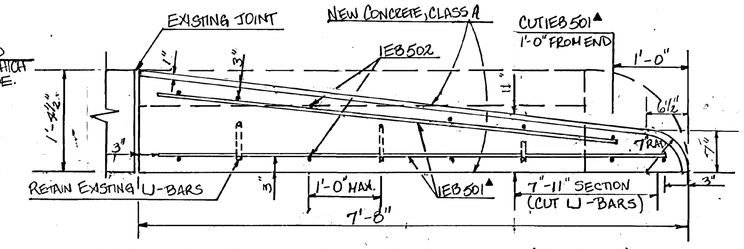

NEW CURB END TREATMENT - EAST END - SOUTH SIDE (PLAN VIEW)

SCALE: 1" = 1'-0"

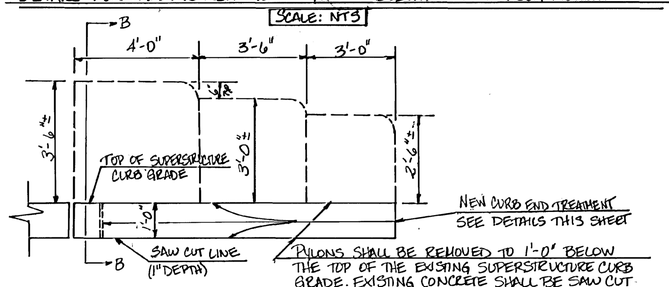

DETAILS FOR PARTIAL REMOVAL OF PYLONS - ELEVATION VIEW FROM SOUTH FASCIA - EAST END

(WEST END SIMILAR)

SCALE: NTS

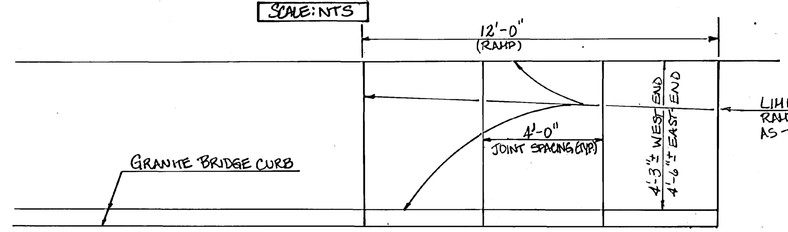

END OF SIDEWALK DETAILS - NORTHWEST END (PLAN VIEW)

(NORTHEAST END OPPOSITE HAND)

SCALE: NTS

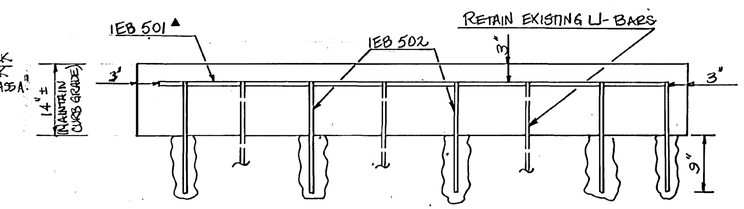

NEW CURB END TREATMENT - EAST END - SOUTH SIDE (ELEVATION VIEW)

SCALE: 1" = 1'-0"

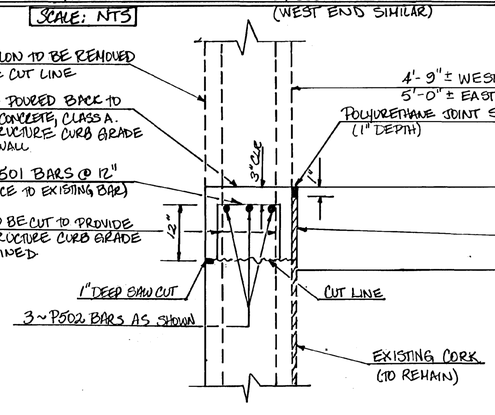

SECTION A-A THROUGH WINGWALL

WEST END: SCALE: 1" = 1'-0"

EAST END: SCALE: NTS.

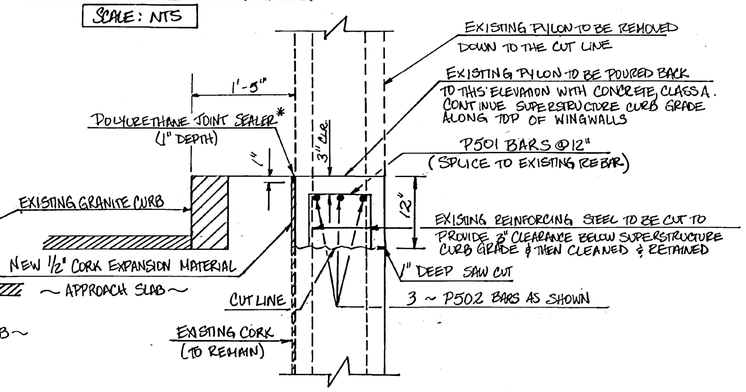

SECTION B-B THROUGH WINGWALL

SCALE: 1" = 1'-0"

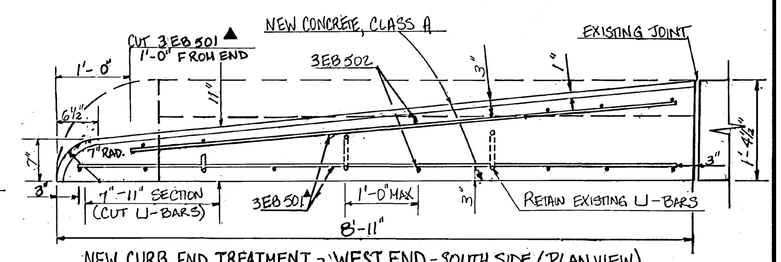

NEW CURB END TREATMENT - WEST END - SOUTH SIDE (PLAN VIEW)

SCALE: 1" = 1'-0"

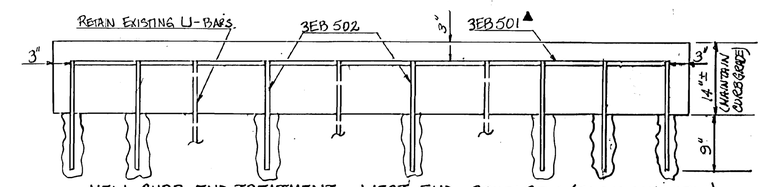

NEW CURB END TREATMENT - WEST END - SOUTH SIDE (ELEVATION VIEW)

SCALE: 1" = 1'-0"

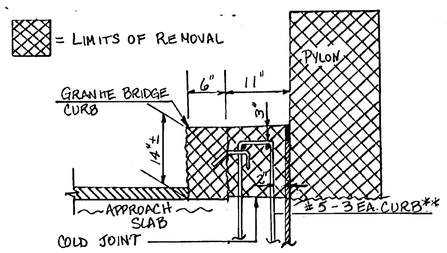

ELEVATION VIEW OF EXISTING CURB END TREATMENT

SCALE. NTS

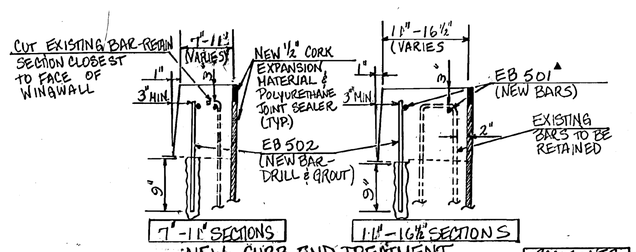

NEW CURB END TREATMENT

SCALE: NTS

** LOCATION OF EXISTING U-BARS NOT KNOWN; DRILL AND GROUT EB 502 TO MAINTAIN MAXIMUM 1'-0" SPACING OF VERTICAL REINFORCEMENT

▲ DENOTES BARS TO BE CUT IN FIELD.

* POLYURETHANE JOINT SEALER WILL BE USED TO SEAL THOSE JOINTS SHOWN AND ALSO THE OTHER EXISTING CURB AND SIDEWALK JOINTS AT THE PIERS AND ABUTMENTS.

STATE OF VERMONT
AGENCY OF TRANSPORTATION

Town Of DERBY	Bridge No. 114
Highway No. I-91	Log Sta. —
	Surv. Sta. —

"PYLON REMOVAL AND CURB END TREATMENT DETAILS AT BRIDGE 114"

Designed By S. GUNN	Drawn By S. GUNN.
Checked By G.S. ROGERS Date 9-90	Bridge Design Supervisor D.E. LATHROP Date 9-90

DERBY IM 091-3 (49)
REFERENCE SHEET 7 OF 7
PLANS SHEET 73 OF 73